CONDOR 45 BUILT-IN SINK RECTANGLE

PRODUCT INFORMATION

Article title	Villeroy & Boch Condor 45 Built-in sink, included Waste system pop-up, of Ceramic, 800 x 510 mm, Steam CeramicPlus
Article number	674502SM
Assembly / Assembly type	surface-mounted installation
Assembly instructions	minimum unit width: 45 cm
Scope of delivery	1 x sink , 1 x pop-up waste system 1 x cover cap, round
Length in mm	510
Width in mm	800
Height in mm	200
Interior depth	180
Collection	Condor 45
Material	Ceramic
Colour name	Steam CeramicPlus
Other material	Grate: Stainless steel Valve: Stainless steel
Position of main bowl	Basin, reversible
Function of the drain fitting	pop-up waste system
Colour designation	Steam
Other colour designations	Grate: Chrome, Valve: Chrome

TECHNICAL DRAWINGS

674502SM

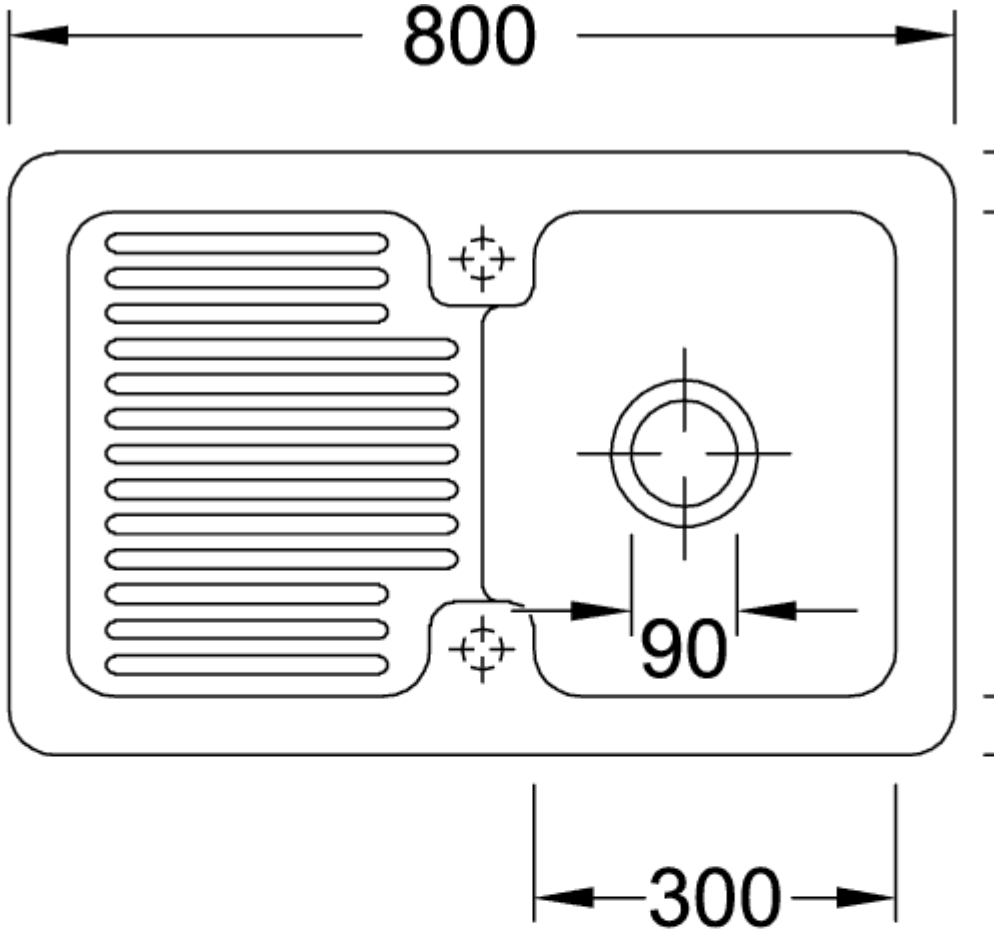

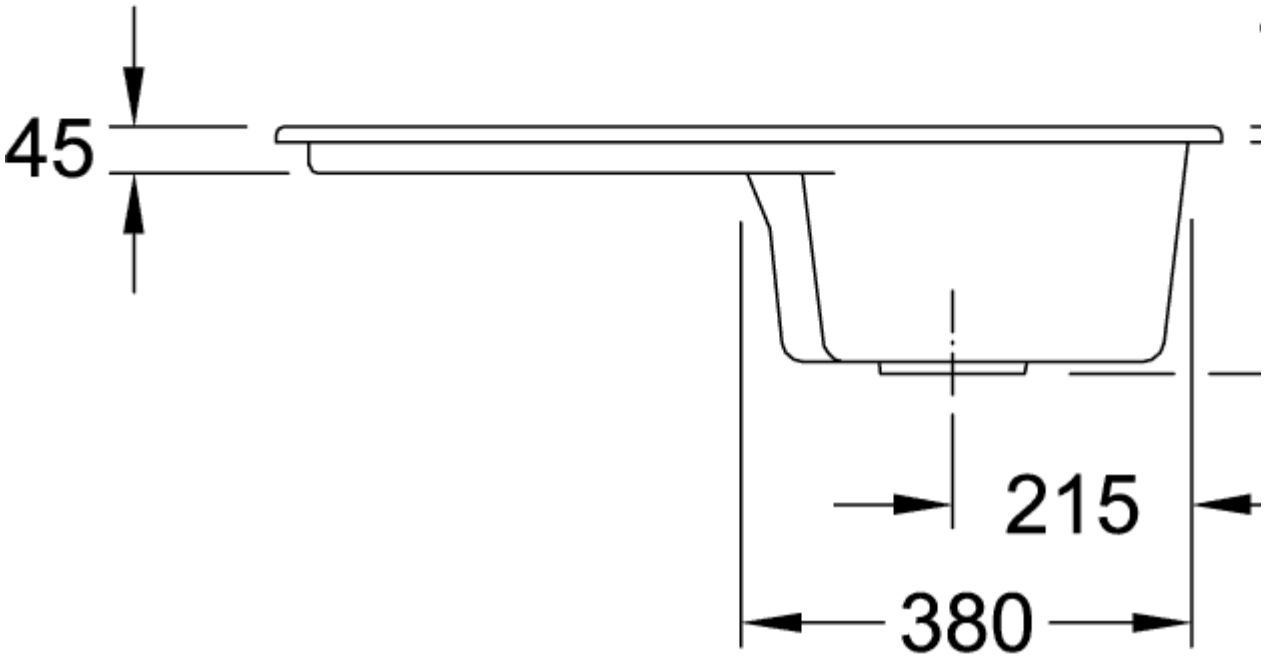
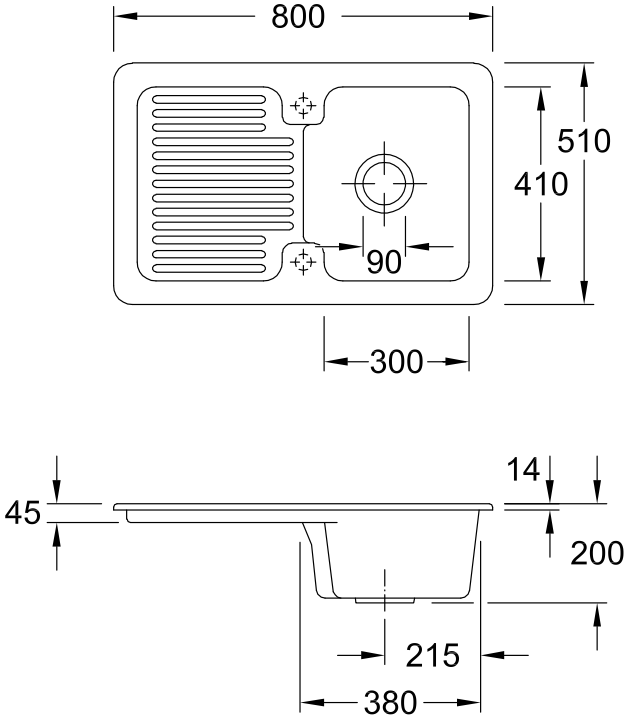
674502SM