SUBWAY STYLE 60 BUILT-IN SINK RECTANGLE

PRODUCT INFORMATION

Article title	Villeroy & Boch Subway Style 60 Built-in sink, included Waste system hand-operated, of Ceramic, 1000 x 510 mm, Graphite CeramicPlus
Article number	336101i4
Assembly / Assembly type	surface-mounted installation
Assembly instructions	minimum unit width: 60 cm
Scope of delivery	1 x sink , 1 x basket strainer waste
Length in mm	510
Width in mm	1000
Height in mm	220
Interior depth	200
Collection	Subway Style 60
Material	Ceramic
Colour name	Graphite CeramicPlus
Other material	Grate: Stainless steel Valve: Stainless steel
Position of main bowl	Basin on right
Function of the drain fitting	basket strainer waste
Colour designation	Graphite
Other colour designations	Grate: Chrome, Valve: Chrome

TECHNICAL DRAWINGS

336101i4

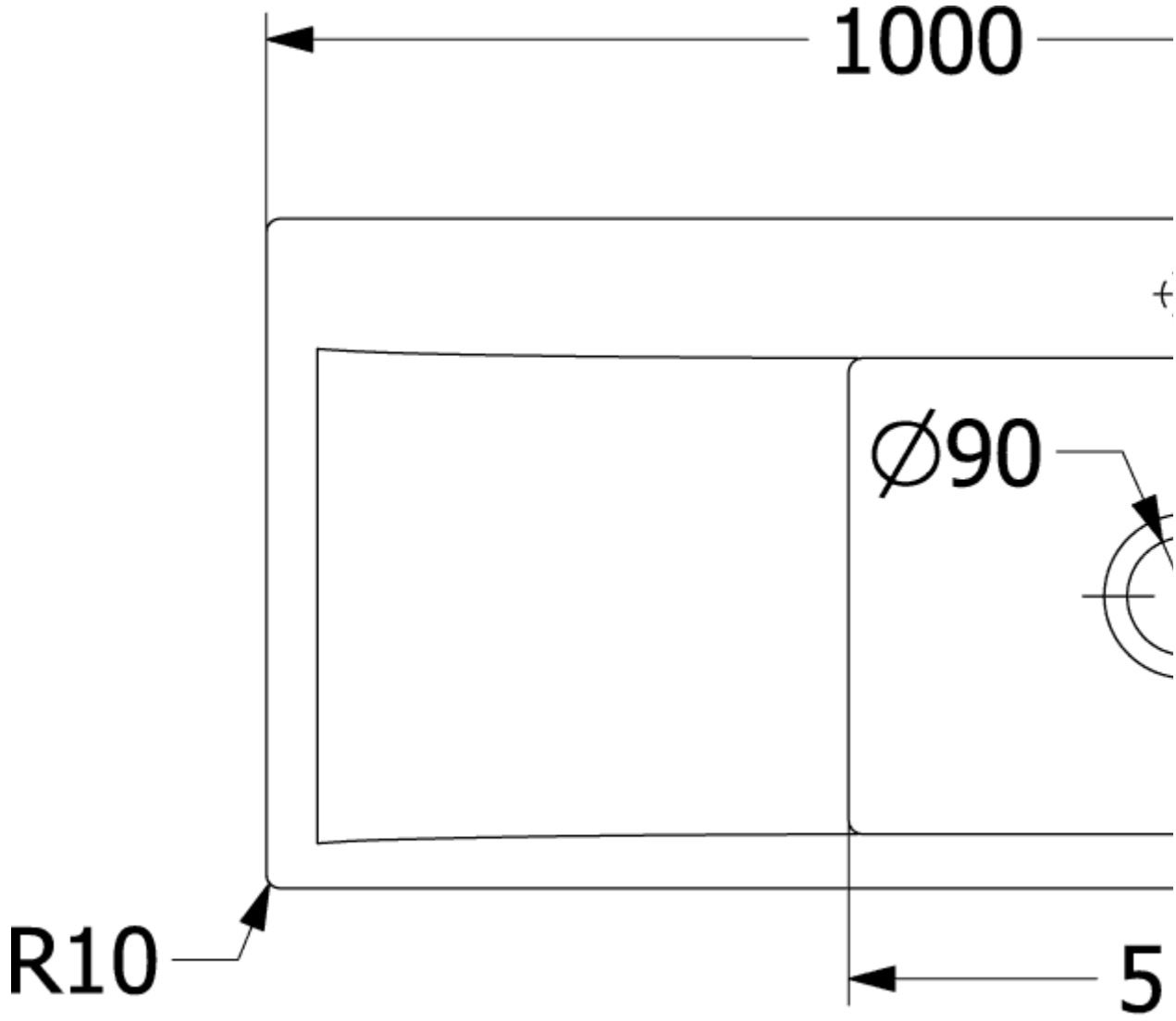
1000
Ø90
R10
5

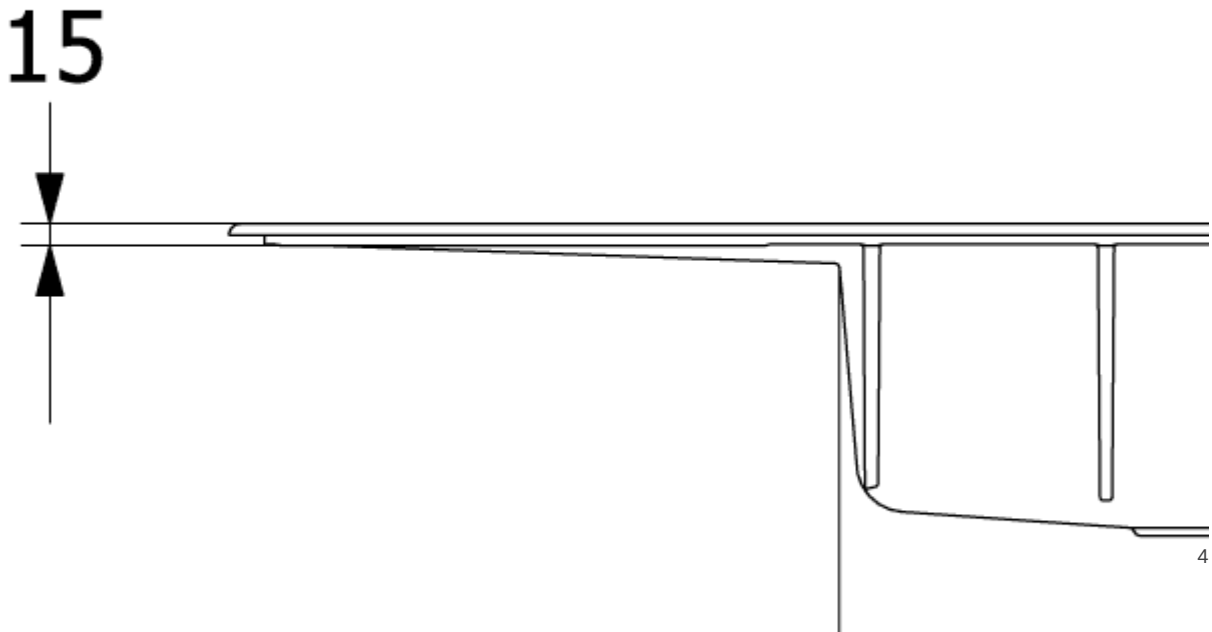
15
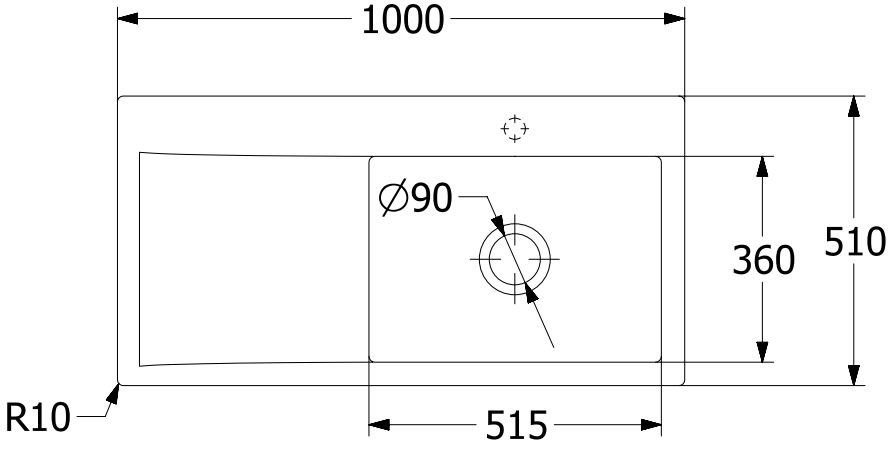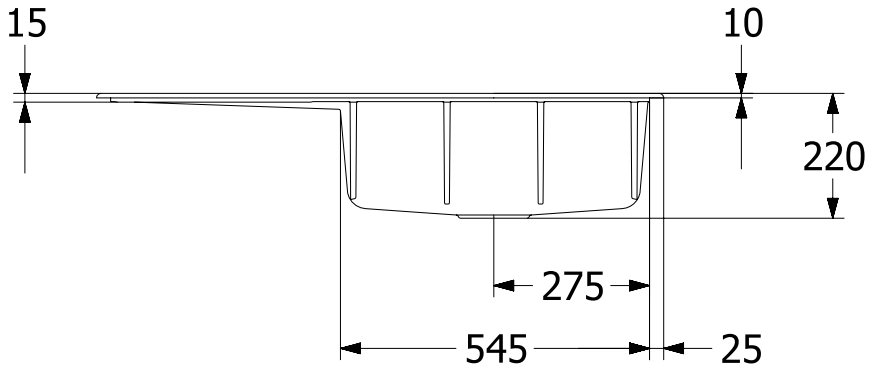
336101i4