SUBWAY 50 FLAT FLUSH-MOUNTED SINK RECTANGLE

PRODUCT INFORMATION

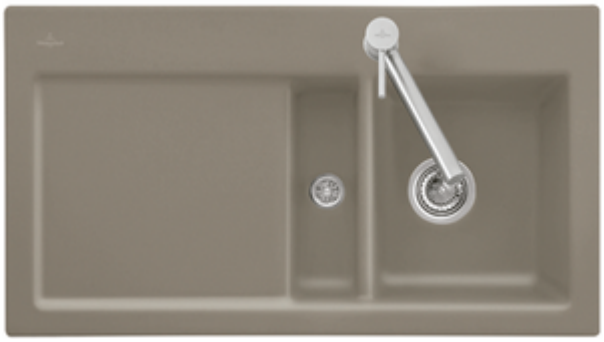

Article title	Villeroy & Boch Subway 50 flat Flush-mounted sink, included Waste system hand-operated, of Ceramic, 880 x 475 mm, Ebony CeramicPlus
Article number	67731FS5
Assembly / Assembly type	flush-fitting installation
Assembly instructions	minimum unit width: 50 cm, Minimum thickness of the countertop when placed with a dishwasher: at least 4 cm|For flush-fit installation in natural stone or artificial stone countertops
Scope of delivery	1 x sink , 1 x basket strainer waste
Length in mm	475
Width in mm	880
Height in mm	220
Collection	Subway 50 flat
Material	Ceramic
Colour name	Ebony CeramicPlus
Other material	Grate: Stainless steel Valve: Stainless steel
Position of main bowl	Basin on left
Function of the drain fitting	basket strainer waste
Colour designation	Ebony
Other colour designations	Grate: Chrome, Valve: Chrome

TECHNICAL DRAWINGS

67731FS5

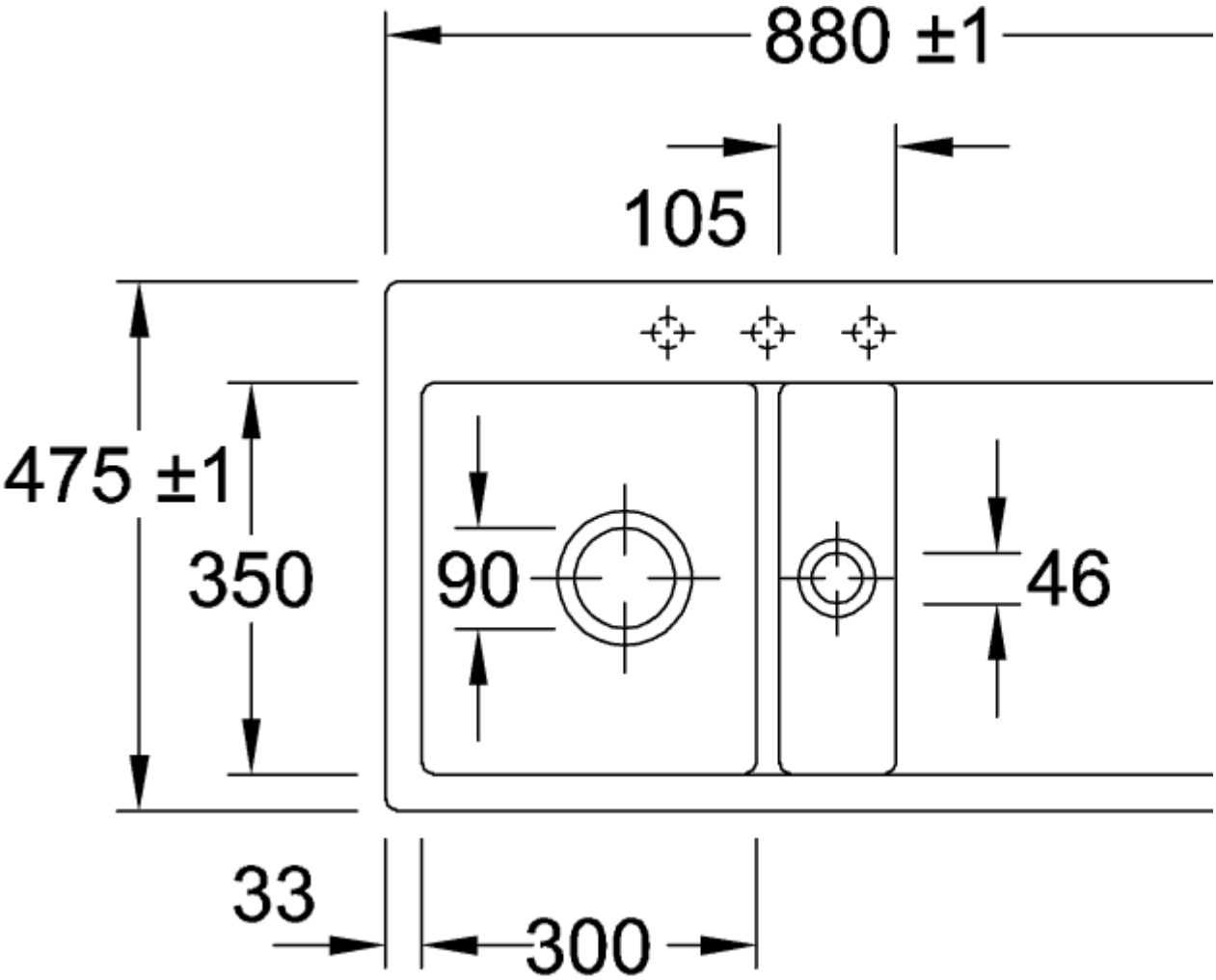
880 ±1
105
475 ±1
350
90
46
33
300

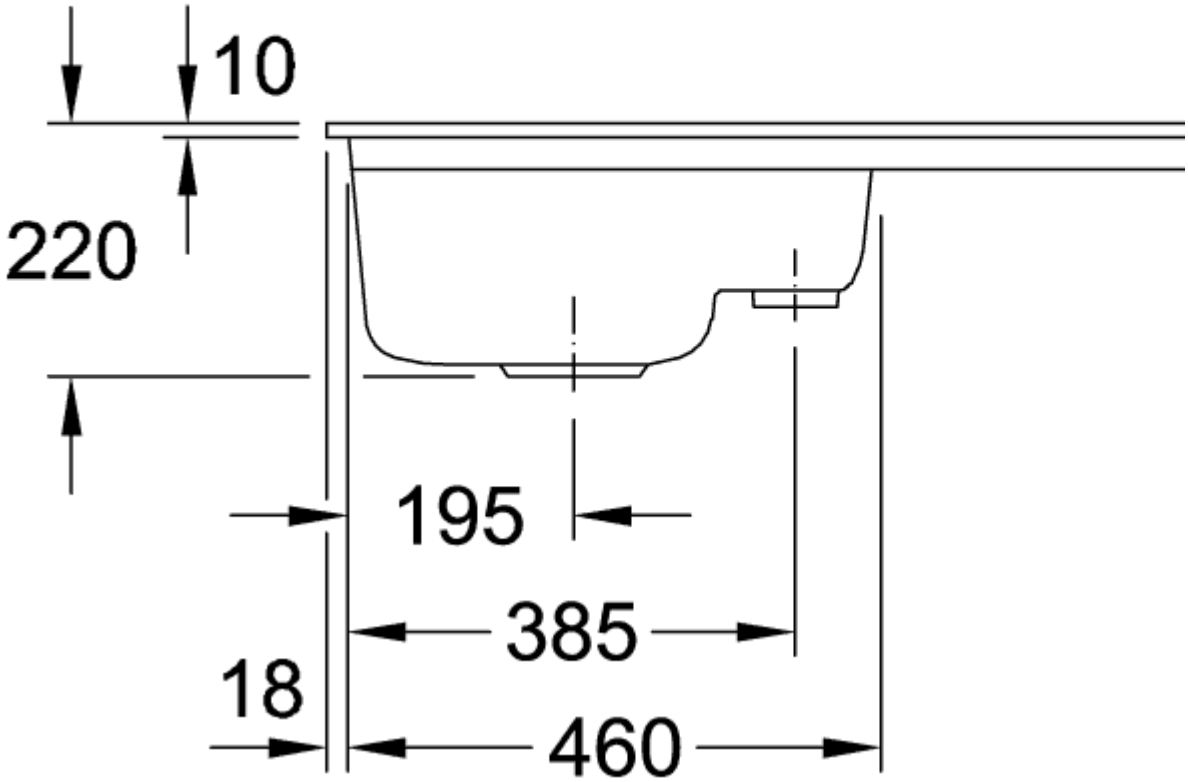
10
220
195
385
18
460
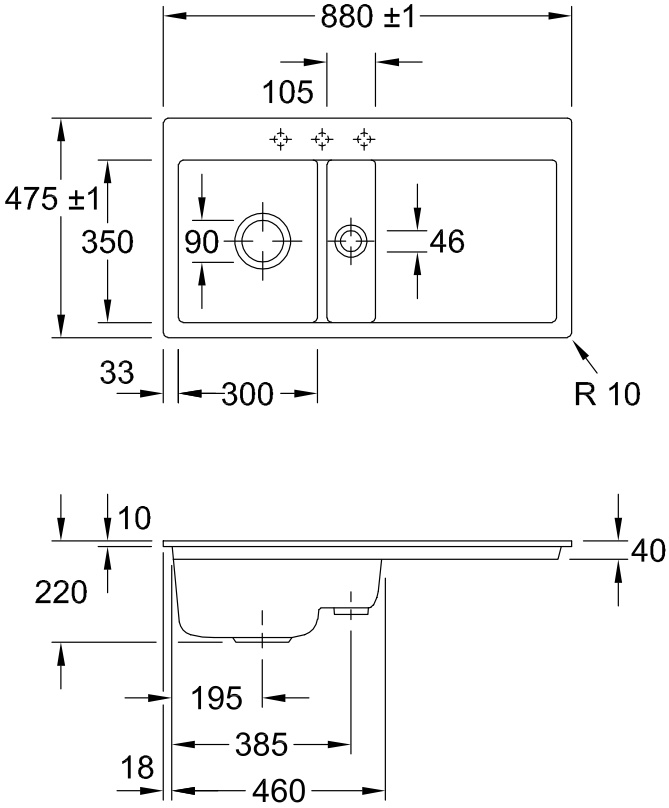
67731FS5