TIMELINE 45 BUILT-IN SINK RECTANGLE

PRODUCT INFORMATION

Article title	Villeroy & Boch Timeline 45 Built-in sink, included Waste system hand-operated, 800 x 510 mm, Cappuccino
Article number	67910131
Assembly / Assembly type	surface-mounted installation
Assembly instructions	minimum unit width: 45 cm
Scope of delivery	1 x sink , 1 x basket strainer waste
Length in mm	510
Width in mm	800
Height in mm	220
Interior depth	202
Collection	Timeline 45
Colour name	Cappuccino
Position of main bowl	Basin, reversible
Function of the drain fitting	basket strainer waste

TECHNICAL DRAWINGS

67910131

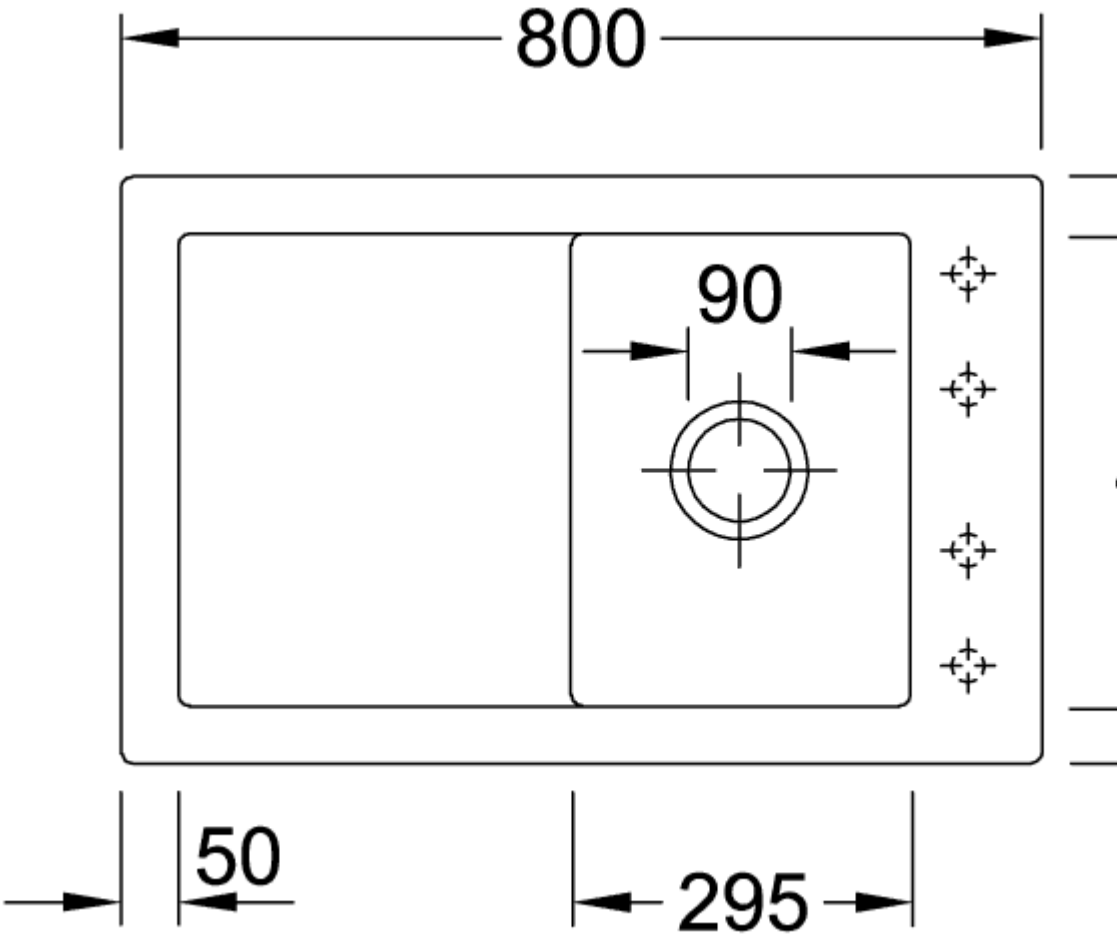
800
90
50
295

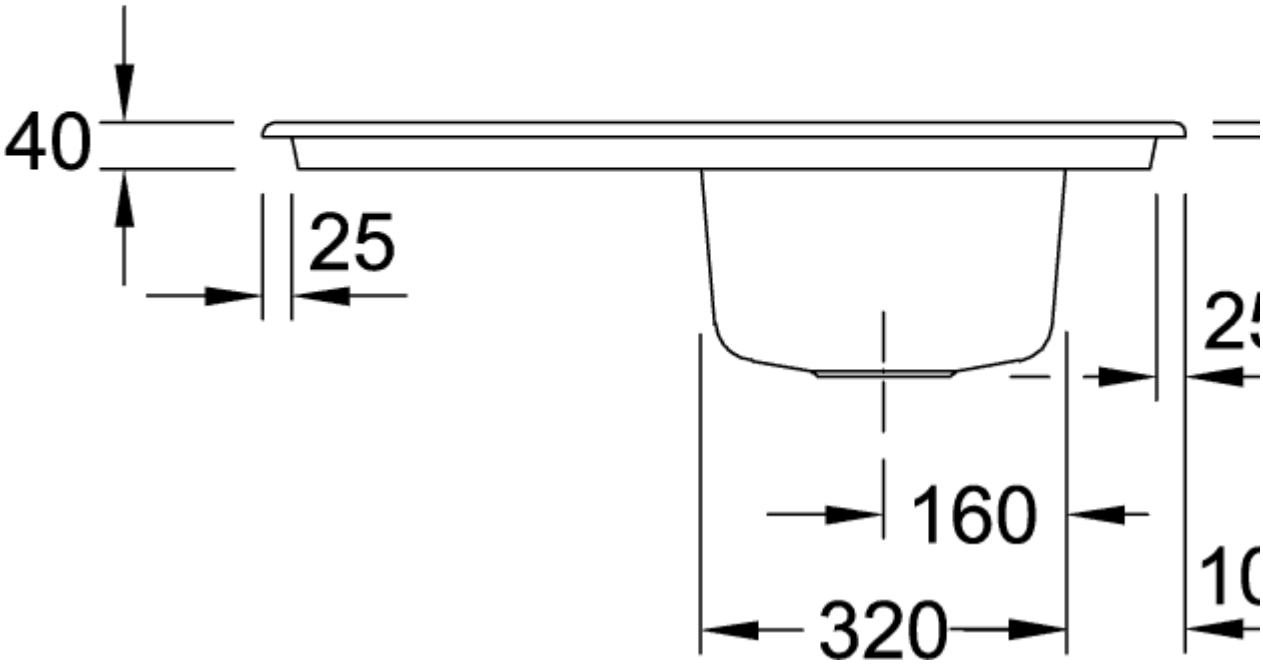
40
25
160
320
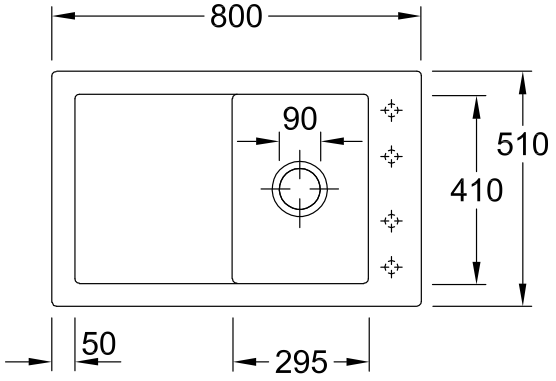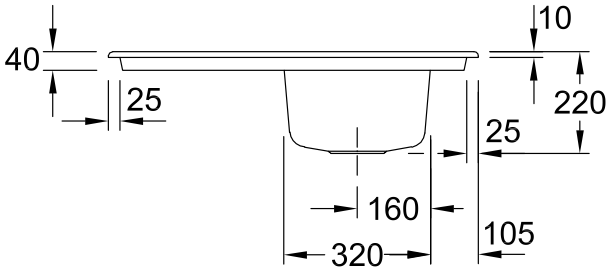
67910131