SUBWAY 45 BUILT-IN SINK RECTANGLE

PRODUCT INFORMATION

Article title	Villeroy & Boch Subway 45 Built-in sink, included Waste system hand-operated
Article number	677201KP
Assembly / Assembly type	surface-mounted installation
Assembly instructions	minimum unit width: 45 cm
Scope of delivery	1 x sink , 1 x basket strainer waste
Interior depth	200
Collection	Subway 45
Position of main bowl	Basin on left
Function of the drain fitting	basket strainer waste

TECHNICAL DRAWINGS

677201KP

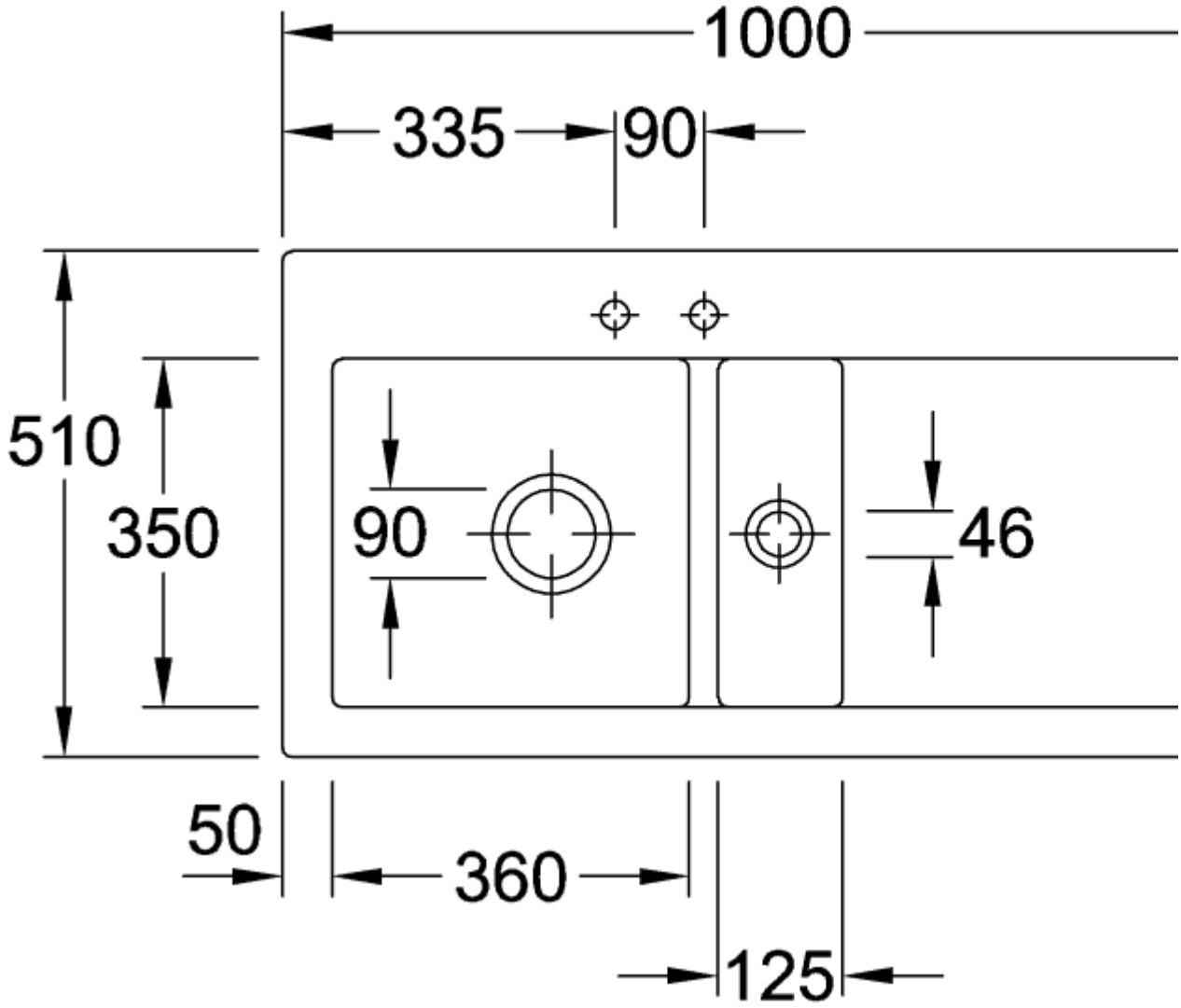
1000
335
90
510
350
90
46
50
360
125

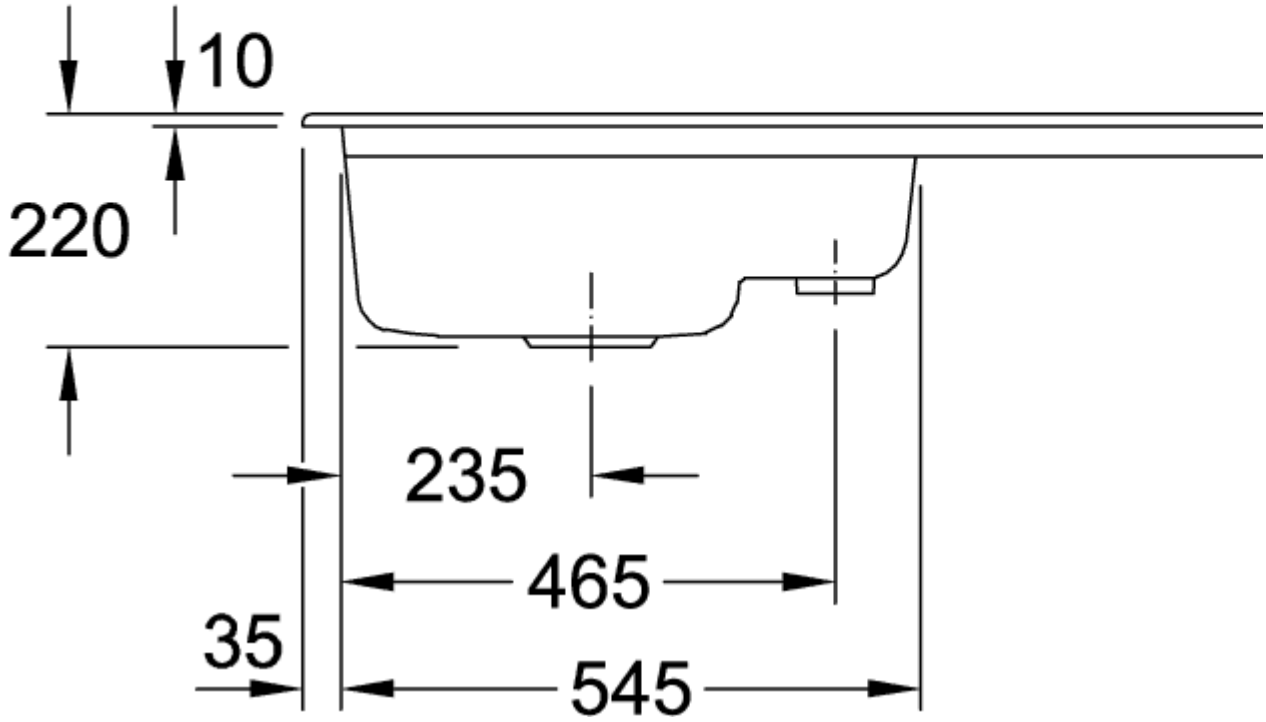
10
220
235
465
35
545
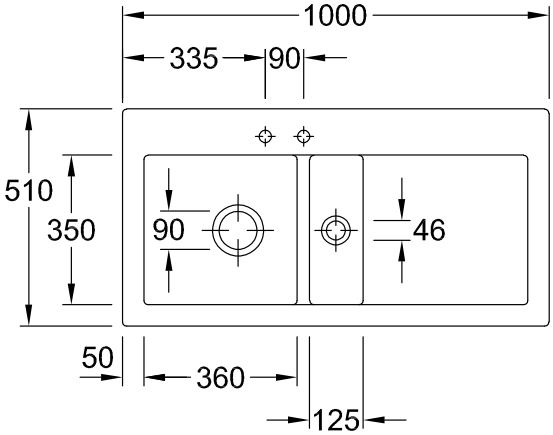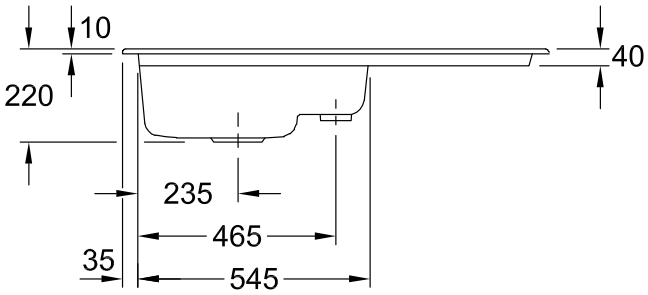
677201KP