CISTERNA 60C UNDERCOUNTER SINK RECTANGLE

PRODUCT INFORMATION

Article title	Villeroy & Boch Cisterna 60C Undercounter sink, included Waste system hand-operated, Fastening set, Espresso glossy
Article number	670601KS
Assembly / Assembly type	Undercounter
Assembly instructions	Installation in natural stone or artificial stone countertops, minimum unit width: 60 cm
Scope of delivery	1 x sink , 1 x basket strainer waste 1 x fastening set
Interior depth	180
Collection	Cisterna 60C
Colour name	Espresso glossy
Position of main bowl	Basin centred
Function of the drain fitting	basket strainer waste

TECHNICAL DRAWINGS

670601KS

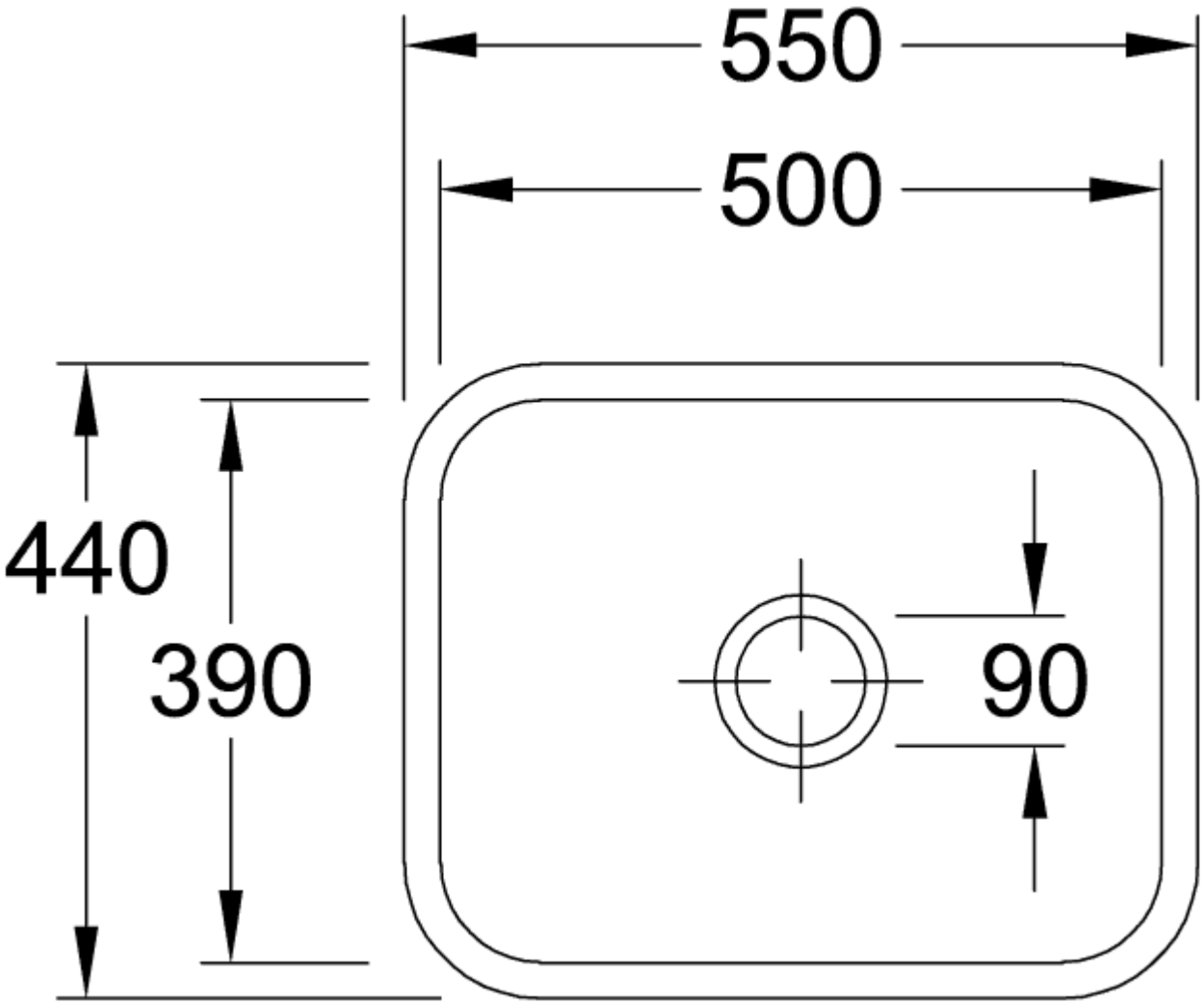
550
500
440
390
90

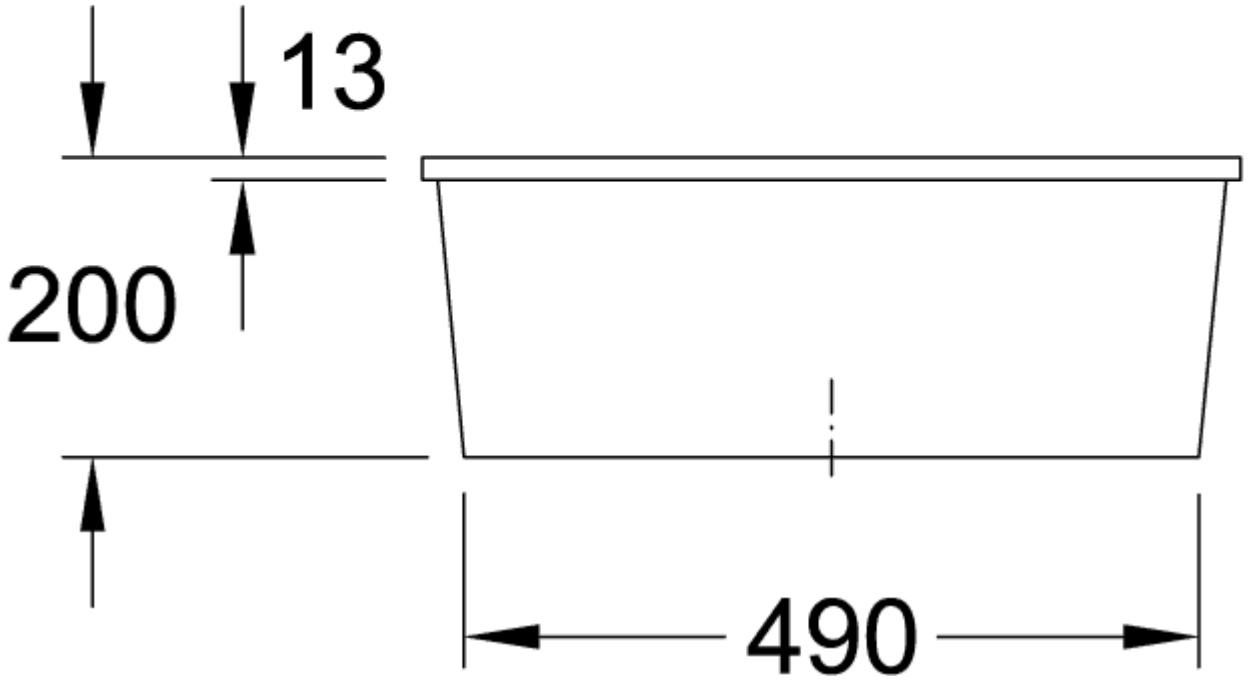
13
200
490
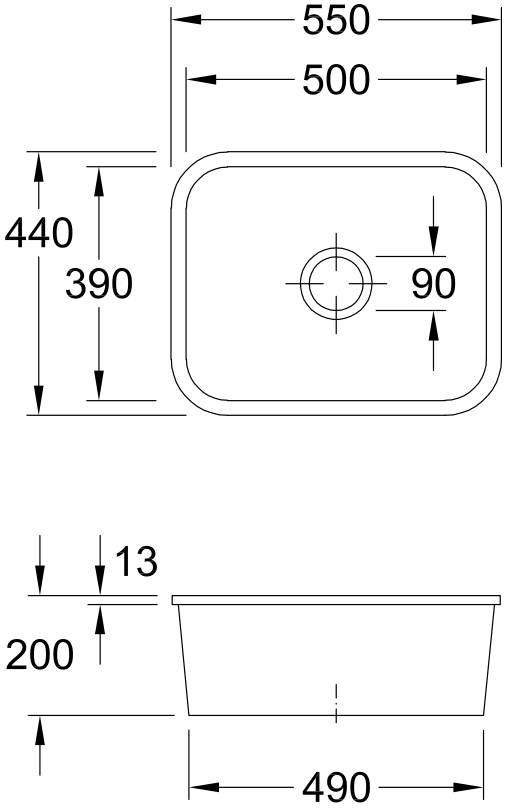
670601KS