# SUBWAY SQUARE SHOWER TRAY SQUARE

## PRODUCT INFORMATION

| | |
|---|---|
| Article title | Villeroy & Boch Subway Square shower tray, 1000 x 1000 x 35 mm, White Alpin |
| Article number | UDA1035SUB1V-01 |
| Assembly / Assembly type | Surface-mounted, Corner installation\|flush-fitting installation\| Installation on a base |
| Assembly instructions | The installation height of the shower tray can be reduced by 30 mm if the Viega outlet fitting art. no. 634 100 is used. Please note: this outlet fitting does not conform to EN 274. |
| Scope of delivery | 1 x square shower tray |
| Length in mm | 1000 |
| Width in mm | 1000 |
| Height in mm | 35 |
| Interior depth | 35 |
| Collection | Subway |
| Material | Acrylic |
| Colour name | White Alpin |
| Shape | Square |
| Colour designation | White Alpin |
| Antibacterial surface (with AntiBac) | No |
| Easy surface cleaning (CeramicPlus) | No |
| With slip resistance | No |

## TECHNICAL DRAWINGS

**UDA1035SUB1V-01**

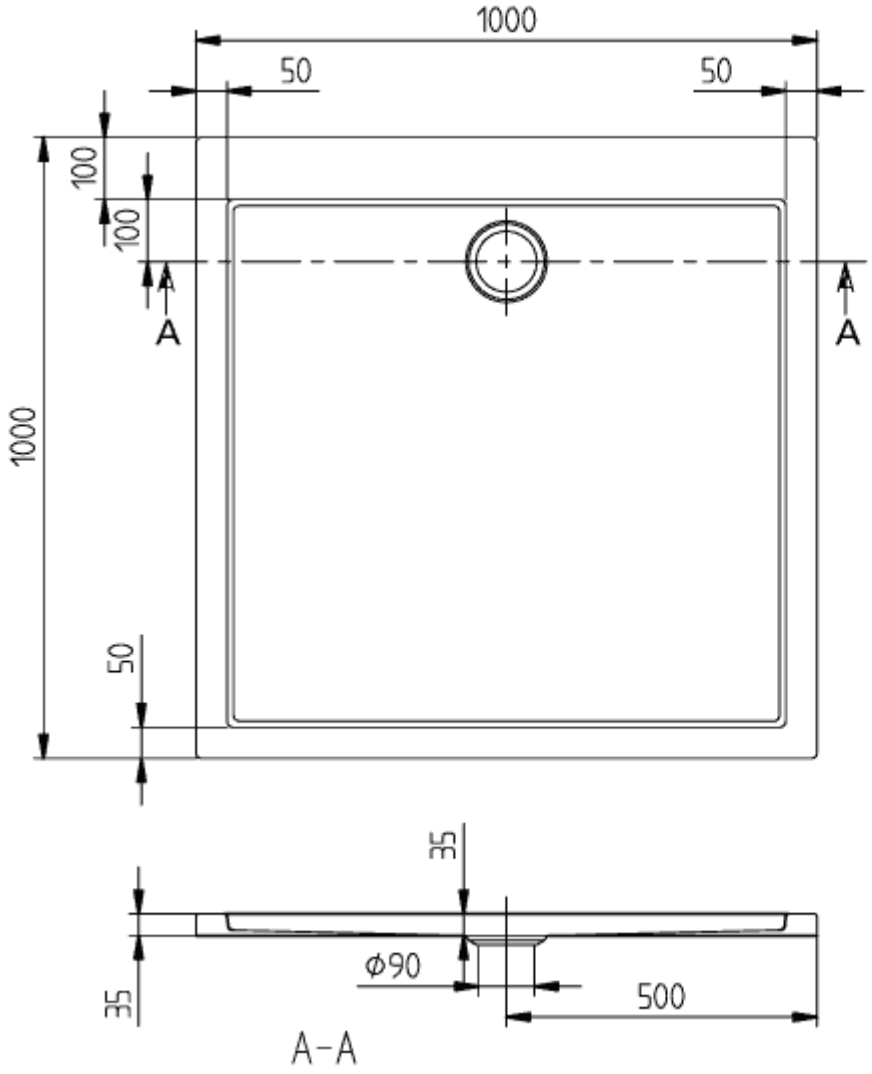


| | |
|---|---|
| SUBWAY<br>1000x1000<br>UDA1035SUB1 | Vi |
| V02 / 31-03-2021 | |
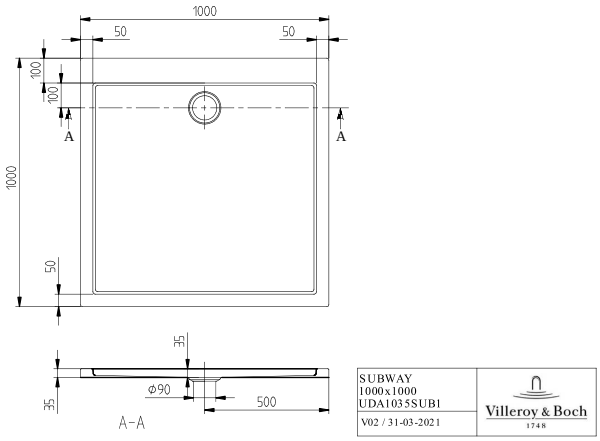
# UDA1035SUB1V-01