# AVEO NEW GENERATION FREE-STANDING BATH FREE-STANDING

## PRODUCT INFORMATION

| | |
|---|---|
| Article title | Villeroy & Boch Aveo New Generation Free-standing bath, 1900 x 950 mm, White Alpin |
| Article number | UBQ194AVE9W1V-01 |
| Assembly / Assembly type | freestanding |
| Scope of delivery | 1 x free-standing bath , 1 x extended outlet and overflow (chrome-plated) |
| Length in mm | 1900 |
| Width in mm | 950 |
| Height in mm | 830 |
| Interior depth | 443 |
| Collection | Aveo New Generation |
| Material | Quaryl® |
| Colour name | White Alpin |
| Other material | Waste/overflow combination: Plastic Outlet cover: Plastic |
| Other surfaces | Waste/overflow combination: glossy, Outlet cover: glossy |
| With overflow | Yes |
| Number of people | 1 |
| Shape | Free-standing |
| Colour designation | White Alpin |
| Other colour designations | Waste/overflow combination: Chrome, Outlet cover: Chrome |
| With slip resistance | No |
| Outlet / outlet | outlet at the foot end |
| Interior form | oval |
| SilentFlow | No |

## TECHNICAL DRAWINGS

### UBQ194AVE9W1V-01

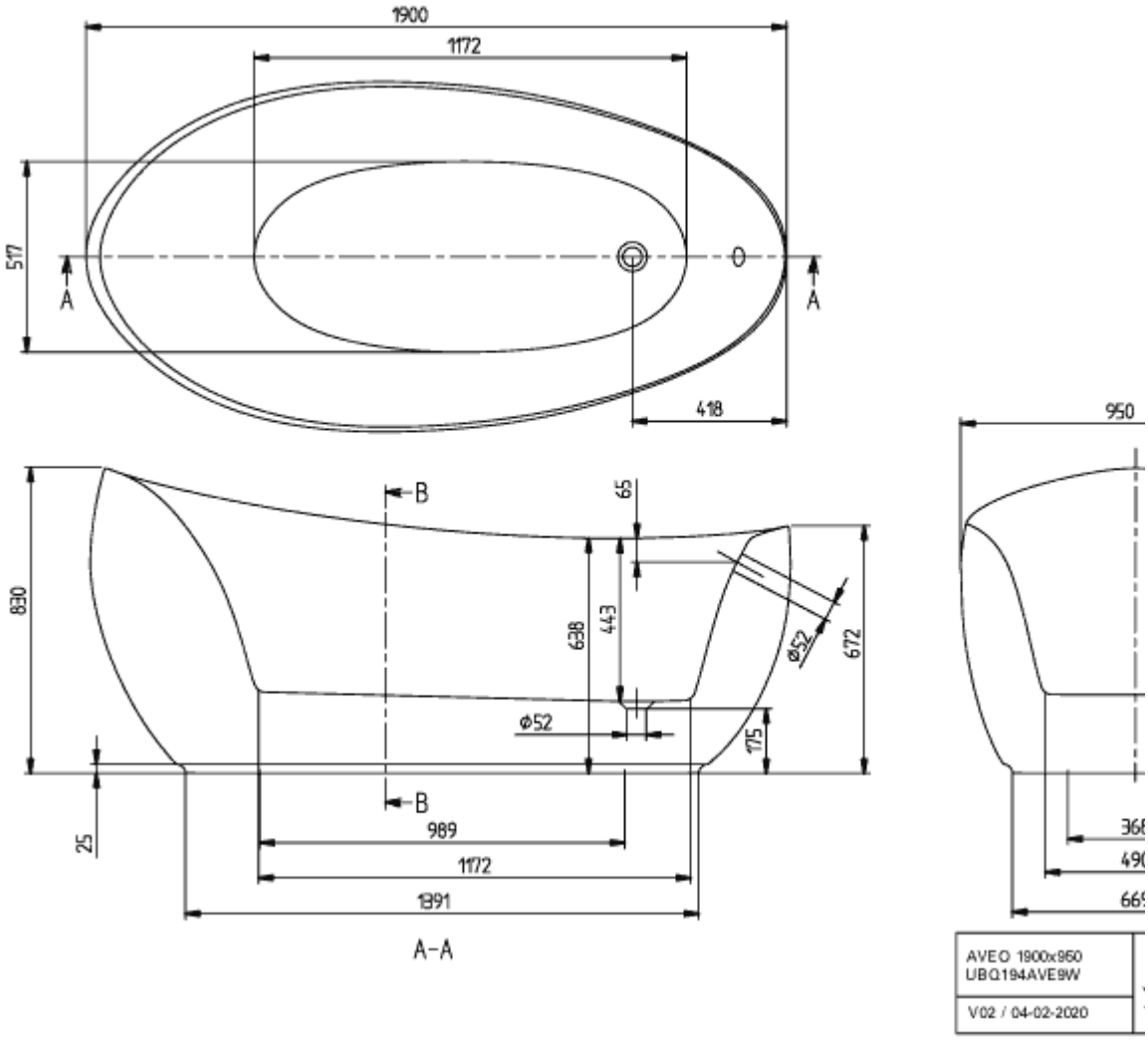
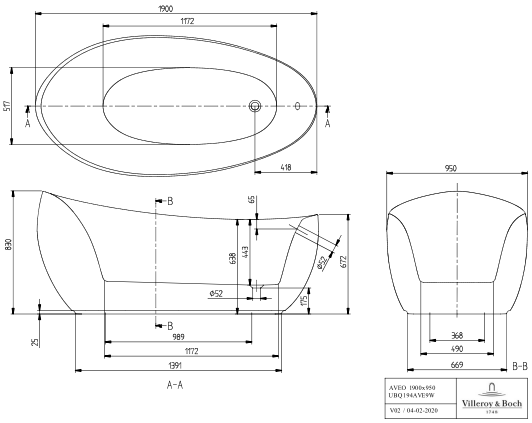
# UBQ194AVE9W1V-01