SQUARO EDGE 12 FREE-STANDING BATH FREE-STANDING

PRODUCT INFORMATION

Article title	Villeroy & Boch Squaro Edge 12 Free-standing bath ColourOnDemand, 1800 x 800 mm, White Alpin
Article number	UBQ180SQE7PDBCV-01
Assembly / Assembly type	freestanding
Scope of delivery	1 x free-standing bath , 1 x extended outlet and overflow (chrome-plated and white)
Length in mm	1800
Width in mm	800
Height in mm	620
Interior depth	450
Collection	Squaro Edge 12
Material	Quaryl®
Colour name	White Alpin
Other material	• Waste/overflow combination: Plastic • Plastic Outlet cover: Plastic • Plastic
Other surfaces	Waste/overflow combination: glossy, glossy, Outlet cover: glossy|glossy
With overflow	Yes
Number of people	2
Design Awards	Interior Innovation Award 2014
Shape	Free-standing
Colour designation	White Alpin
Other colour designations	Waste/overflow combination: Chrome, White Alpin, Outlet cover: Chrome|White Alpin
With slip resistance	No
Outlet / outlet	central outlet
Interior form	rectangular
SilentFlow	No

TECHNICAL DRAWINGS

UBQ180SQE7PDBCV-01

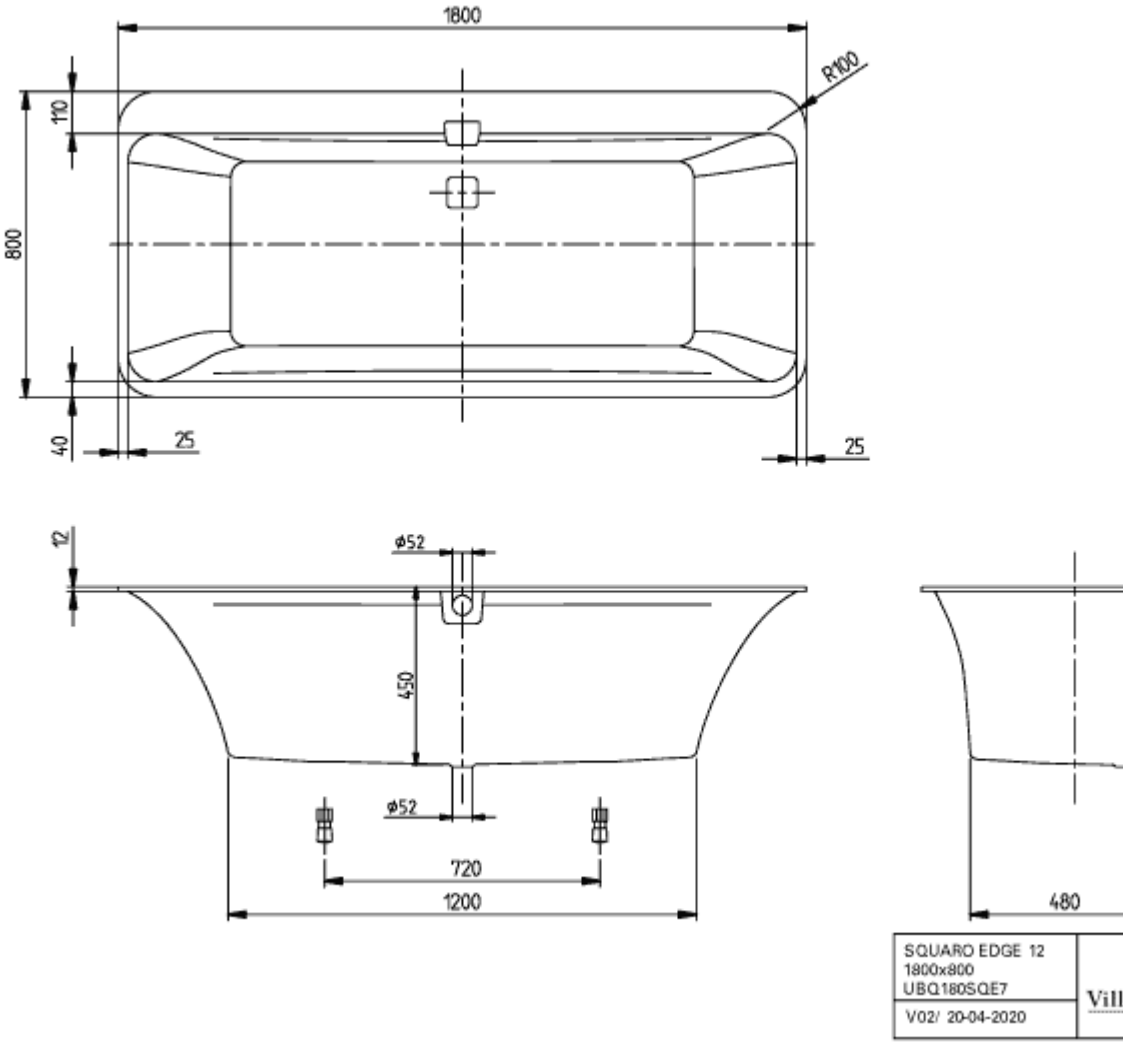

UBQ180SQE7PDBCV-01

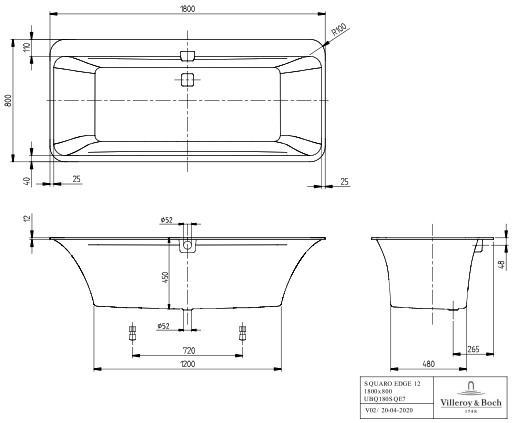

UBQ180SQE7PDBCV-01

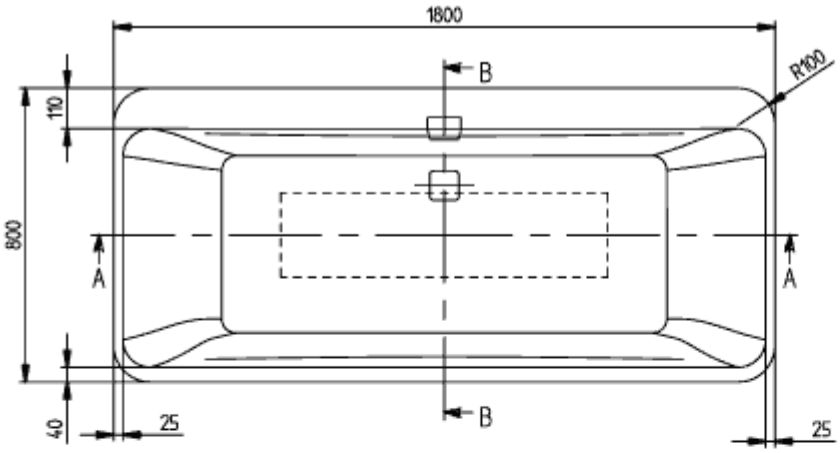

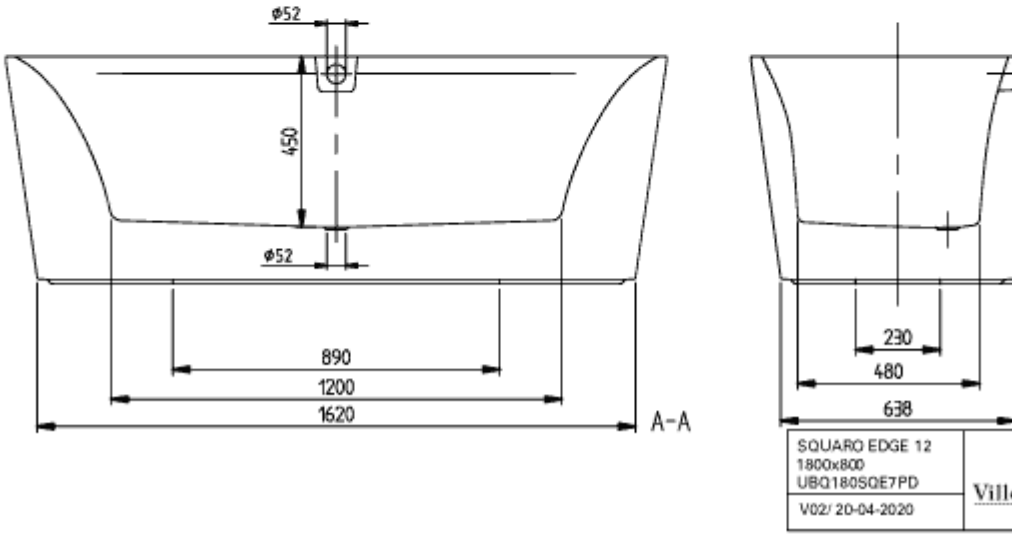
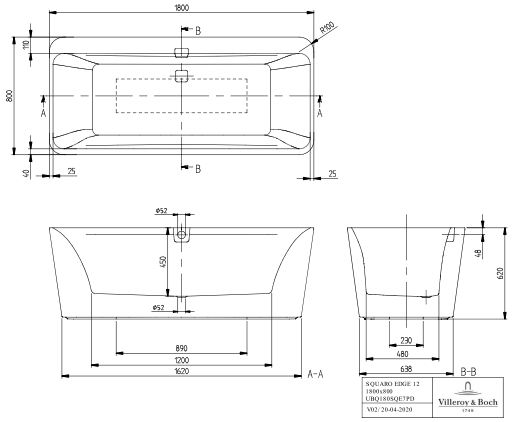
UBQ180SQE7PDBCV-01