MY ART RECTANGULAR BATH RECTANGLE

PRODUCT INFORMATION

Article title	Villeroy & Boch My Art Rectangular bath, 1800 x 800 mm, White Alpin
Article number	UBQ180MYA2V-01
Assembly / Assembly type	built-in installation
Scope of delivery	1 x rectangular bath , 2 x bath support frame (self-adhesive), adjustable from 130 - 180 mm
Length in mm	1800
Width in mm	800
Height in mm	525
Interior depth	500
Collection	My Art
Material	Quaryl®
Colour name	White Alpin
With overflow	Yes
Number of people	2
Shape	Rectangle
Colour designation	White Alpin
With slip resistance	No
Outlet / outlet	central outlet
Interior form	other
SilentFlow	No

TECHNICAL DRAWINGS

UBQ180MYA2V-01

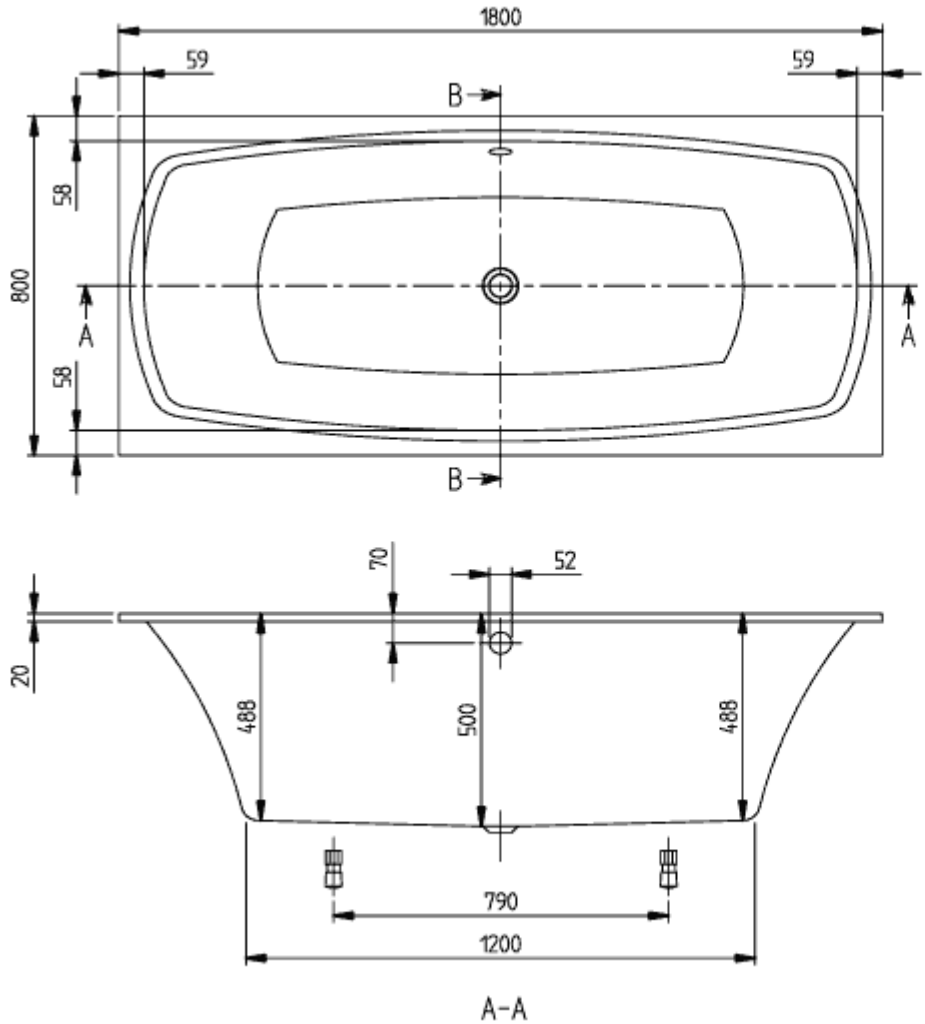

MY ART 1800x800
UBQ180MYA2

V02/ 25-02-2020
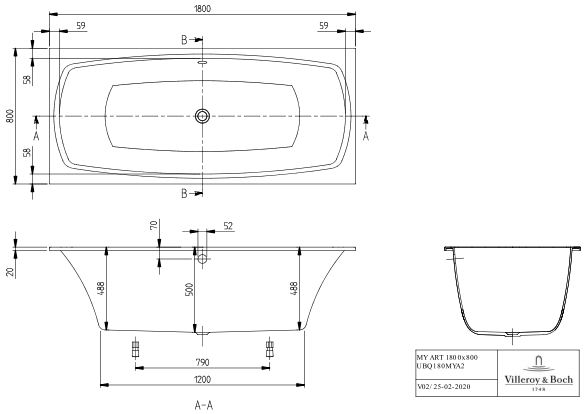
UBQ180MYA2V-01