LIBRA RECTANGULAR BATH RECTANGLE

PRODUCT INFORMATION

Article title	Villeroy & Boch Libra Rectangular bath, 1700 x 750 mm, White Alpin
Article number	UBQ170LIB2V-01
Assembly / Assembly type	built-in installation
Scope of delivery	1 x rectangular bath , 1 x holesaw (for drilling the overflow hole) 2 x bath support frame (self-adhesive), adjustable from 130 - 180 mm
Length in mm	1700
Width in mm	750
Height in mm	457
Interior depth	432
Collection	Libra
Material	Quaryl®
Colour name	White Alpin
With overflow	Yes
Number of people	1
Shape	Rectangle
Colour designation	White Alpin
With slip resistance	No
Outlet / outlet	outlet at the foot end
Interior form	oval
SilentFlow	No

TECHNICAL DRAWINGS

UBQ170LIB2V-01

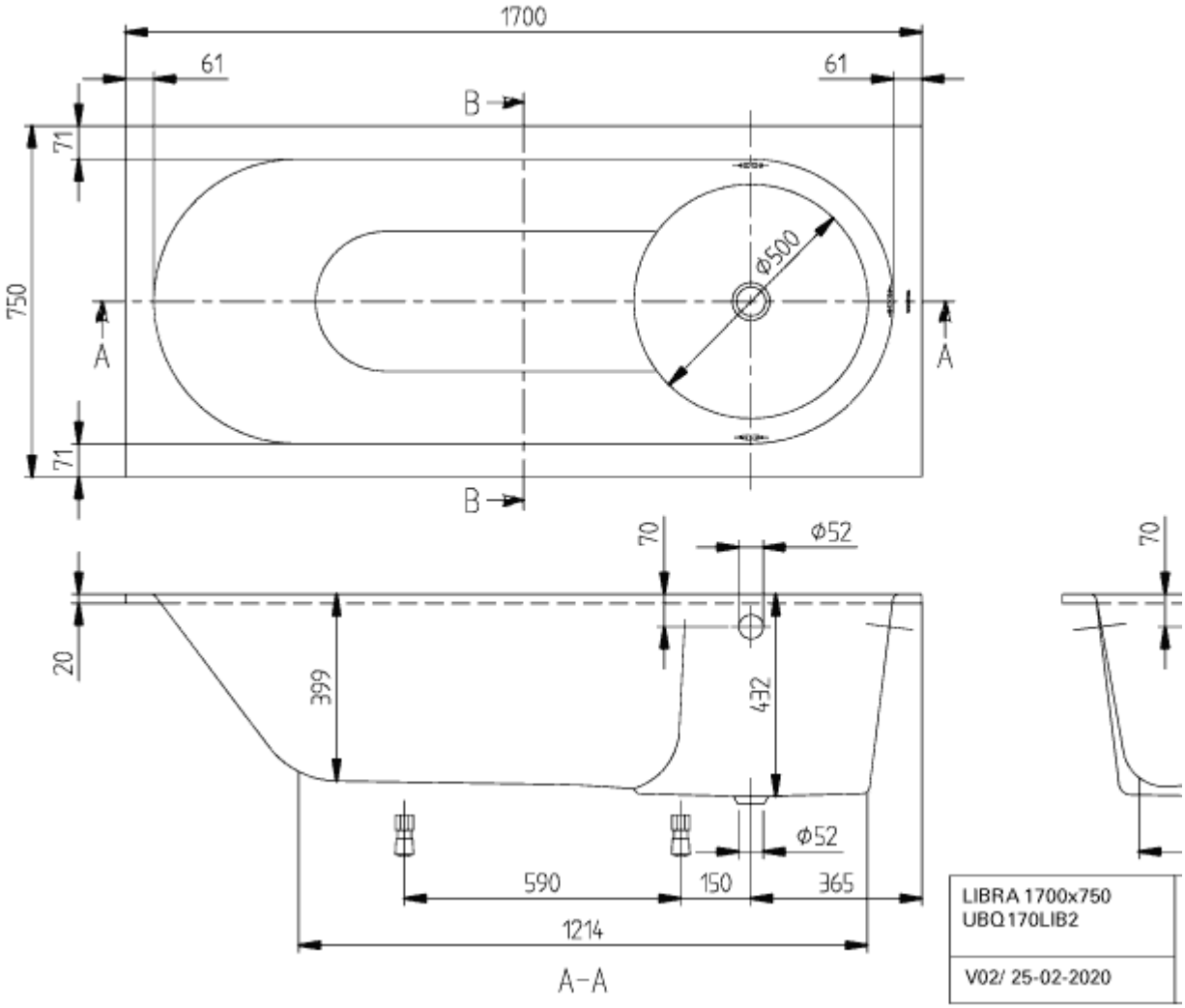
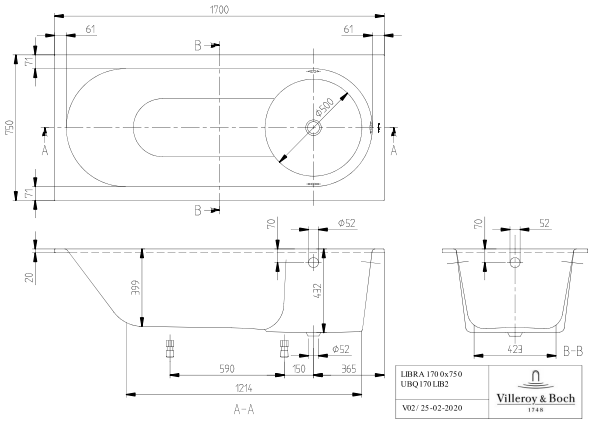
UBQ170LIB2V-01