LOOP & FRIENDS RECTANGULAR BATH RECTANGLE

PRODUCT INFORMATION

Article title	Villeroy & Boch Loop & Friends Rectangular bath SQUARE, 1700 x 750 mm, White Alpin
Article number	UBA170LFS2V-01
Assembly / Assembly type	built-in installation
Scope of delivery	1 x rectangular bath
Length in mm	1700
Width in mm	750
Height in mm	465
Interior depth	440
Collection	Loop & Friends
Material	Acrylic
Colour name	White Alpin
With overflow	Yes
Number of people	2
Shape	Rectangle
Colour designation	White Alpin
With slip resistance	No
Outlet / outlet	central outlet
Interior form	rectangular
SilentFlow	No

TECHNICAL DRAWINGS

UBA170LFS2V-01

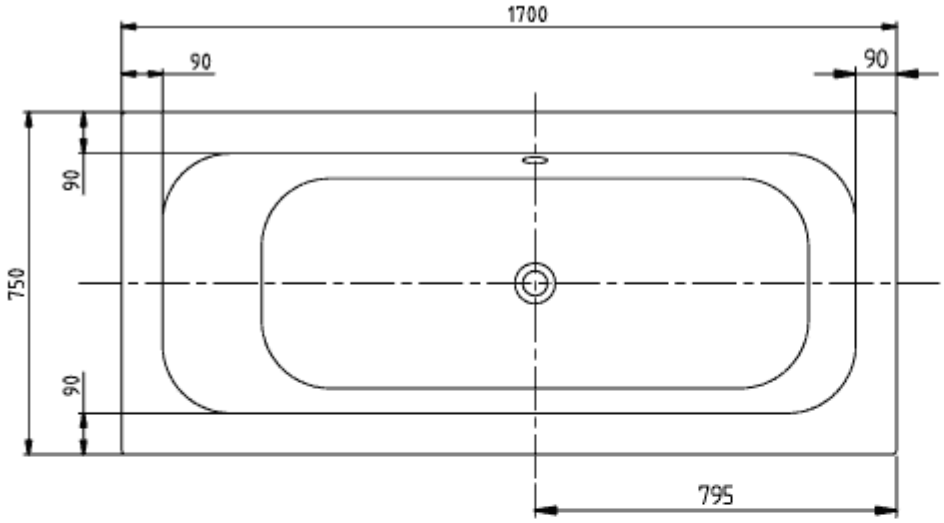

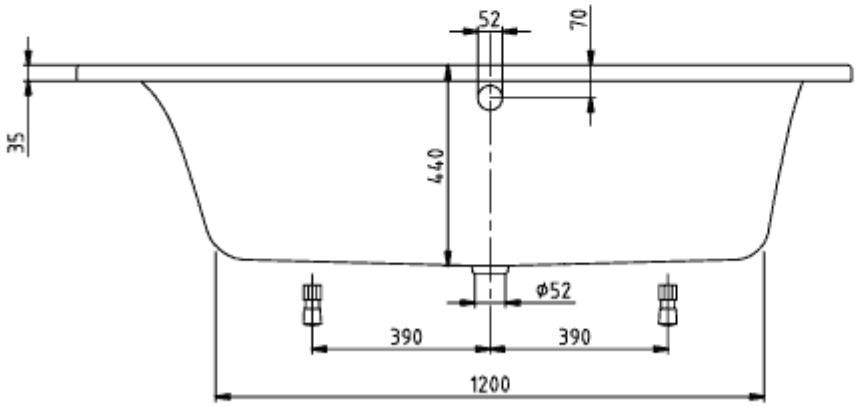

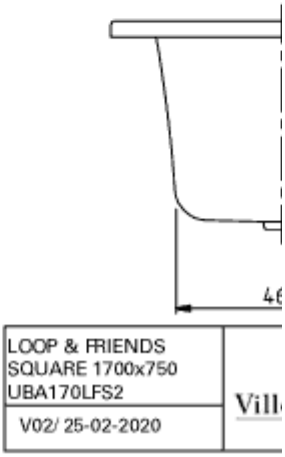
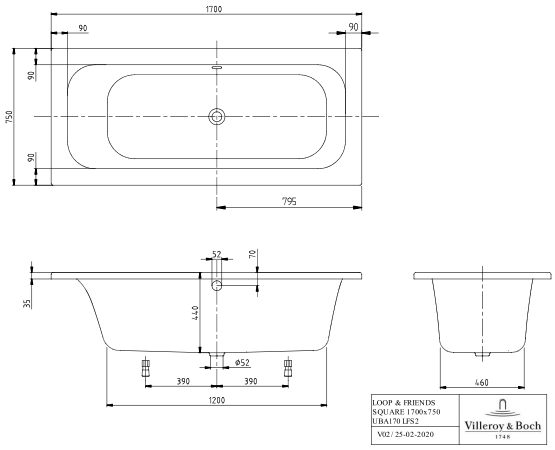
UBA170LFS2V-01