# VENTICELLO VANITY UNIT ANGULAR

## PRODUCT INFORMATION

| | |
|---|---|
| Article title | Villeroy & Boch Venticello Vanity unit, 2 pull-out compartments, 1257 x 436 x 502 mm, Glossy White / Glossy White |
| Article number | A94905DH |
| Assembly / Assembly type | wall-mounted |
| Type of opening | 2 pull-out compartments |
| Equipment | 2 x wide glass drawer divider , 4 x narrow glass drawer divider 2 x accessory box L 2 x pull-out compartment |
| Scope of delivery | 1 x vanity unit , 1 x fastening set |
| Position of washbasin | for 2 washbasins |
| Furniture with tap hole | Tap hole pre-drilled at the factory |
| Depth in mm | 502 |
| Width in mm | 1257 |
| Height in mm | 436 |
| Depth with handle mm | 502 |
| Depth without handle mm | 477 |
| Collection | Venticello |
| Suitable for | selected surface-mounted washbasins |
| Function | with SoftClosing |
| Material front | MDF |
| Surface of front | Film |
| Material body | MDF |
| Surface of body | Film |
| Material cover panel | MDF |
| Other material | Handle: aluminium |
| Other surfaces | Handle: Copper, glossy |
| Shape | Angular |
| Colour designation | Glossy White |
| Colour designation of cover panel | Glossy White |
| Other colour designations | Handle: Copper |
| With lighting | No |
| Smart home compatible | No |

## TECHNICAL DRAWINGS

### A94905DH

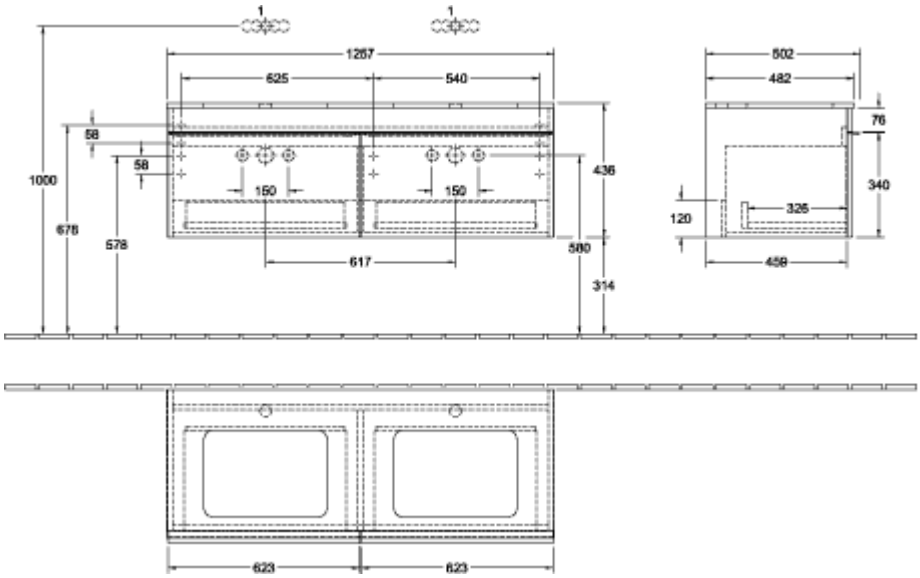

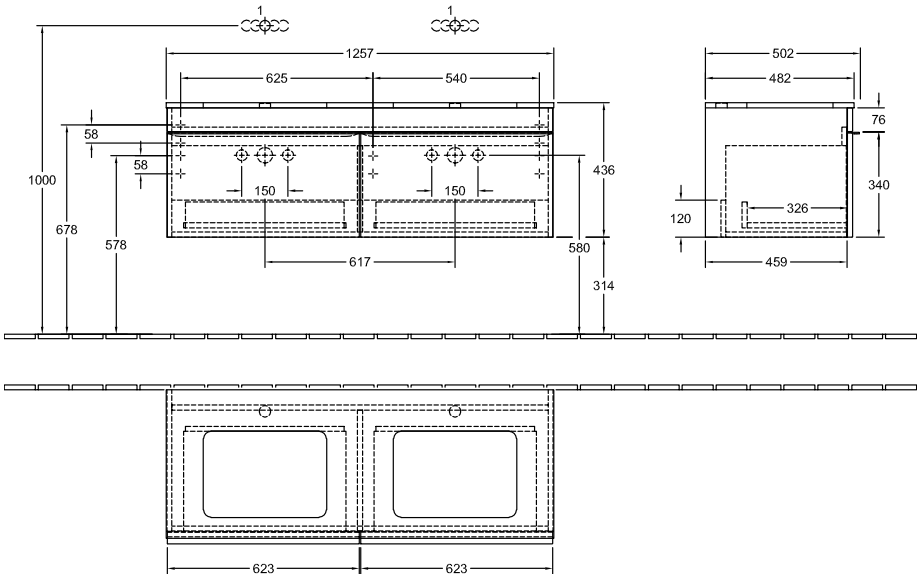
### A94905DH