SUBWAY 2.0 SIDE CABINET ANGULAR

PRODUCT INFORMATION

Article title	Villeroy & Boch Subway 2.0 Side cabinet, 1 door, 2 drawers, 356 x 857 x 370 mm, Black Matt Lacquer / Glass Silver Grey
Article number	A7131RPD
Assembly / Assembly type	wall-mounted
Type of opening	1 door, 2 drawers
Door hinge	hinges on right
Equipment	2 x pull-out compartment , 1 x door 1 x shelf
Scope of delivery	1 x side cabinet , 1 x fastening set
Depth in mm	370
Width in mm	356
Height in mm	857
Collection	Subway 2.0
Function	with SoftClosing
Material front	MDF
Surface of front	Paint
Material body	MDF
Surface of body	Paint
Material cover panel	Glass
Shape	Angular
Colour designation	Black Matt Lacquer
Colour designation of cover panel	Glass Silver Grey
With lighting	No
Smart home compatible	No

TECHNICAL DRAWINGS

A7131RPD

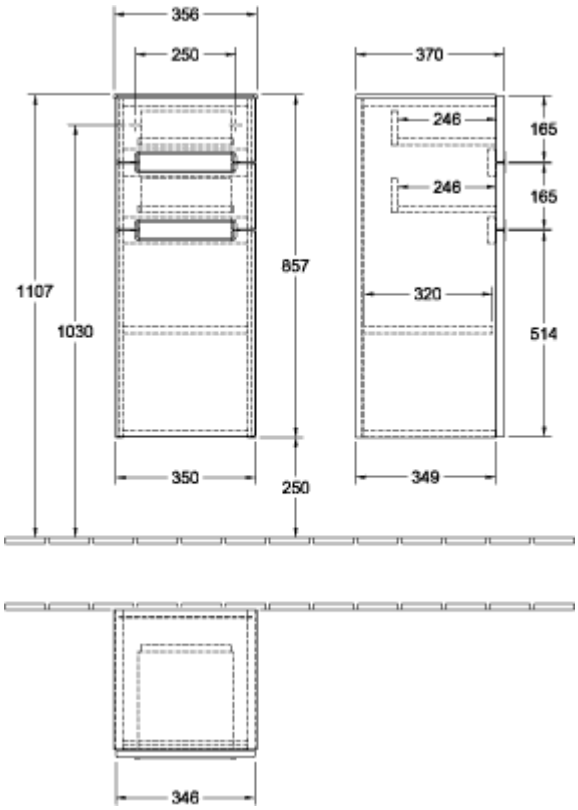

A7131RPD

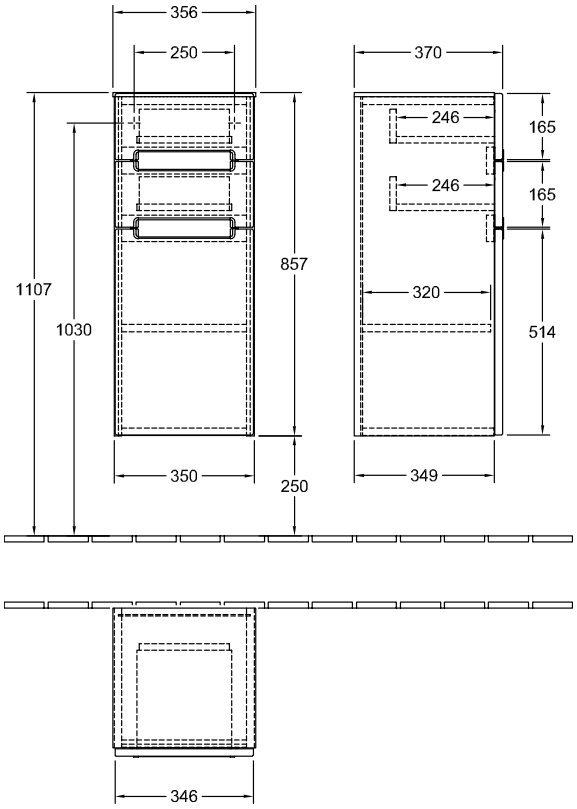
356
250
370
246
165
246
165
857
1107
320
1030
514
350
250
349
346