ACCESSORIES WATER-INLET CONNECTOR

PRODUCT INFORMATION

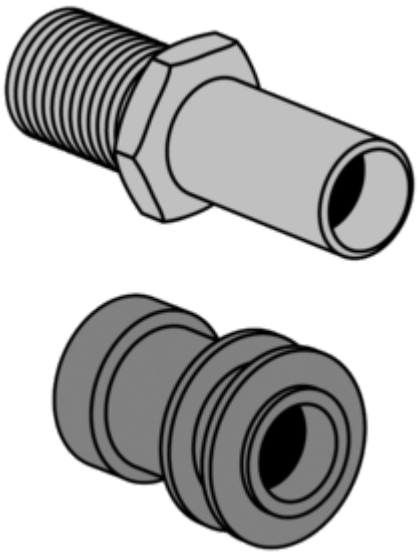

Article title	Villeroy & Boch Accessories Water-inlet connector, 76 x 80 x 27,5 mm
Article number	99330000
Scope of delivery	1 x water-inlet connector
Depth in mm	80
Width in mm	76
Height in mm	27,5
Diameter in mm	35
Collection	Accessories
Material	Metal
Other material	Seal: Rubber
Other surfaces	Seal: matt