O.NOVO COVER

PRODUCT INFORMATION

Article title	Villeroy & Boch O.novo Cover, 390 x 490 mm, White Alpin
Article number	88476101
Depth in mm	490
Width in mm	390
Height in mm	80
Collection	O.novo
Colour name	White Alpin
Colour designation	White Alpin
Easy surface cleaning (CeramicPlus)	No
Rimless (mit DirectFlush)	No

TECHNICAL DRAWINGS

88476101

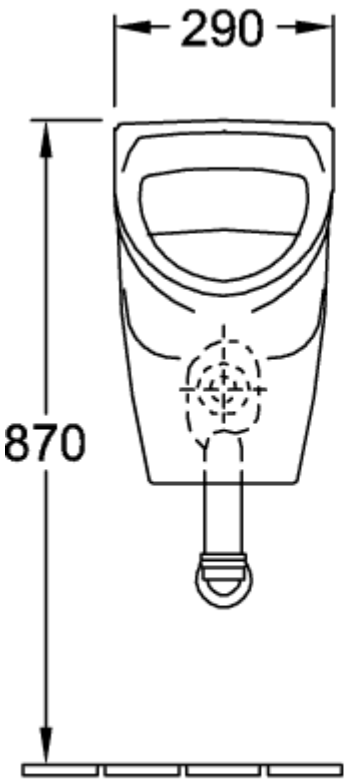
290
870

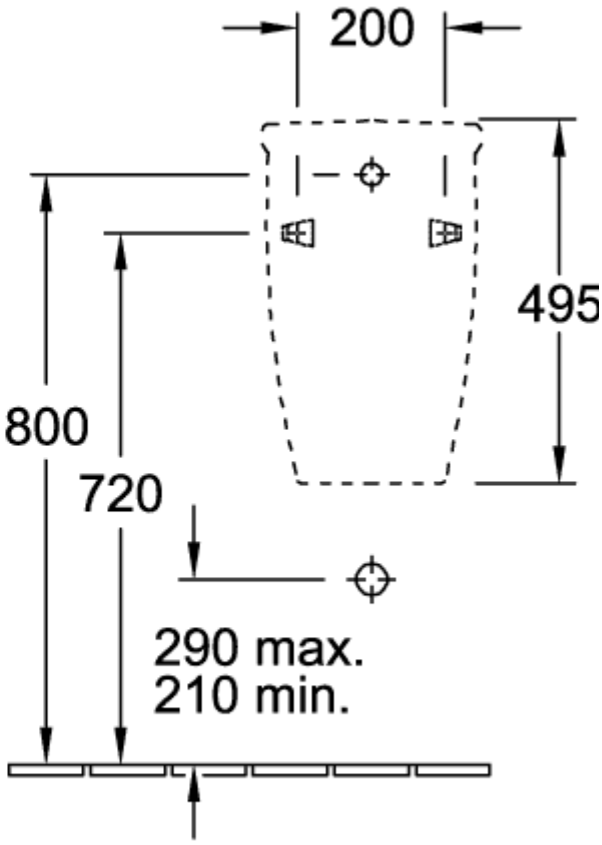
200
495
800
720
290 max.
210 min.

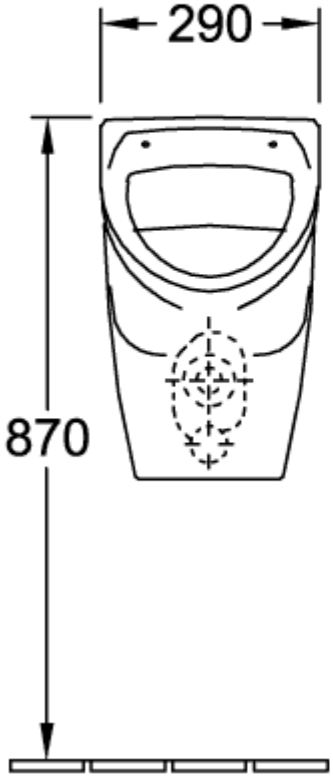
290
870

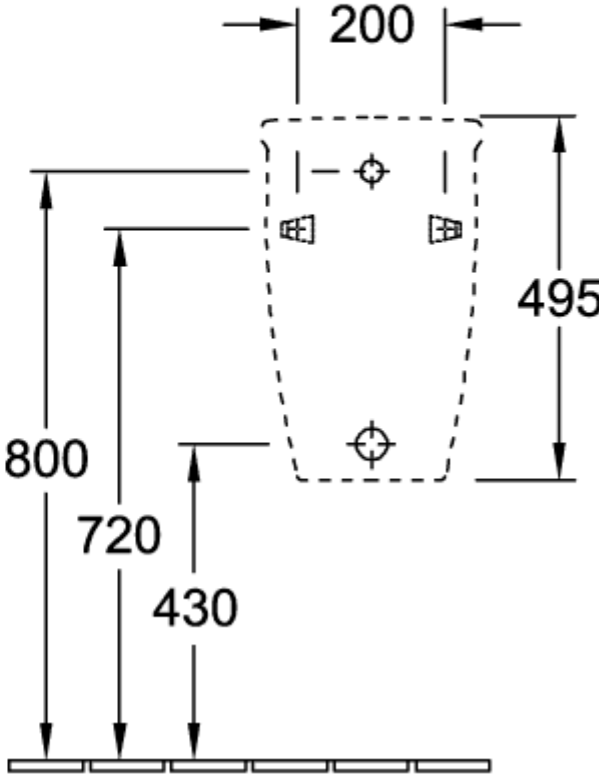
200
495
800
720
430

88476101

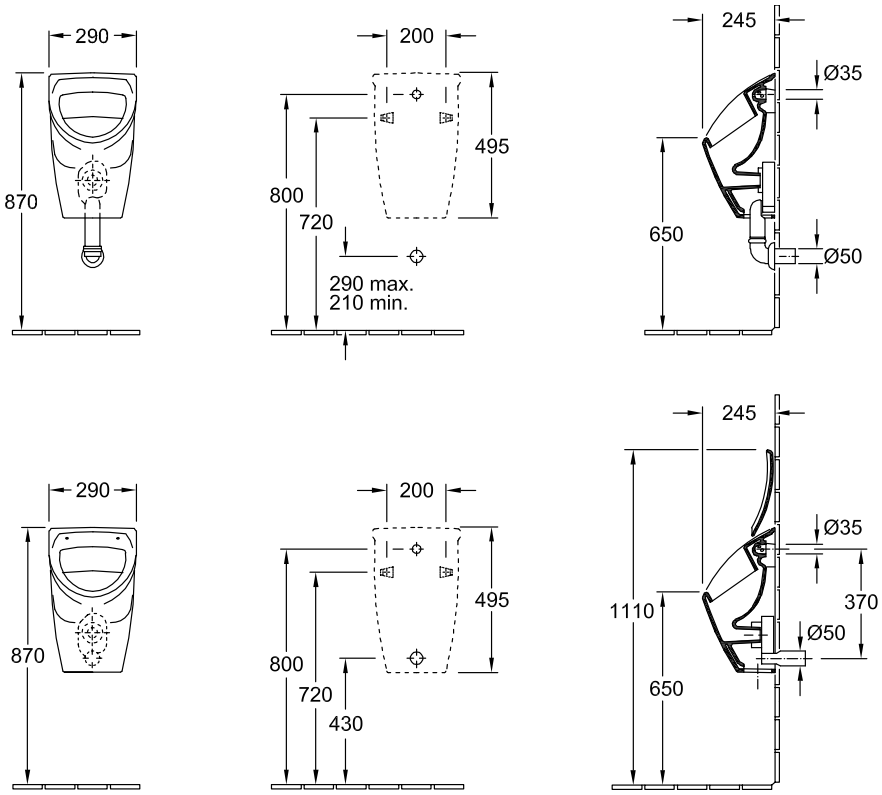
290
870
200
495
800
720
290 max.
210 min.
245
Ø35
650
Ø50
290
870
200
495
800
720
430
245
Ø35
1110
370
Ø50
650