O.NOVO SIPHONIC URINAL COMPACT OVAL

PRODUCT INFORMATION

Article title	Villeroy & Boch O.novo Siphonic urinal Compact, without cover, with target, concealed water inlet, 290 x 245 mm, White Alpin
Article number	75570501
Assembly / Assembly type	wall-mounted
Scope of delivery	1 x siphonic urinal , 1 x fastening set
Depth in mm	245
Width in mm	290
Height in mm	495
Collection	O.novo
Suitable for	Installation without lid
Flush volume l	1,0 / l
Material	Sanitary ceramics
surface	glossy
Colour name	White Alpin
Shape	Oval
Colour designation	White Alpin
Easy surface cleaning (CeramicPlus)	No
Rimless (mit DirectFlush)	No
Flush type	Siphonic urinal
Outlet / outlet	Outlet may be concealed depending on the type of extractor section
Target	with target

TECHNICAL DRAWINGS

75570501

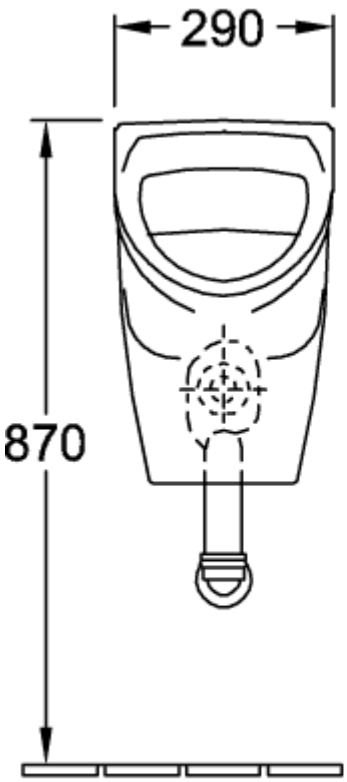
290
870

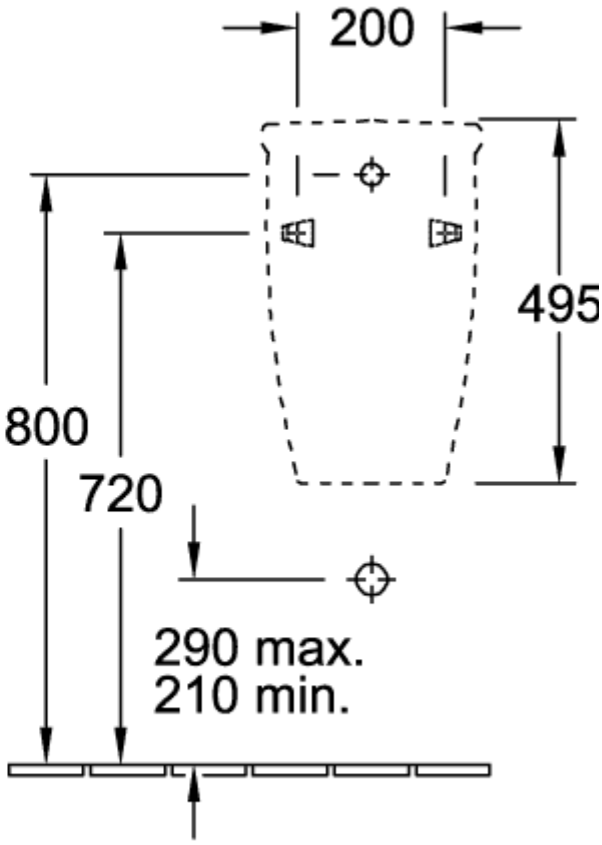
200
495
800
720
290 max.
210 min.

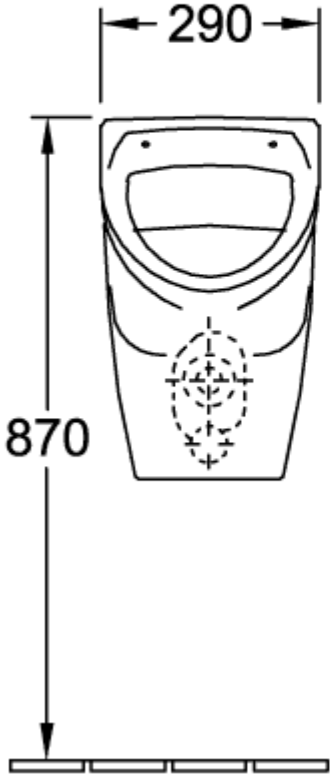
290
870

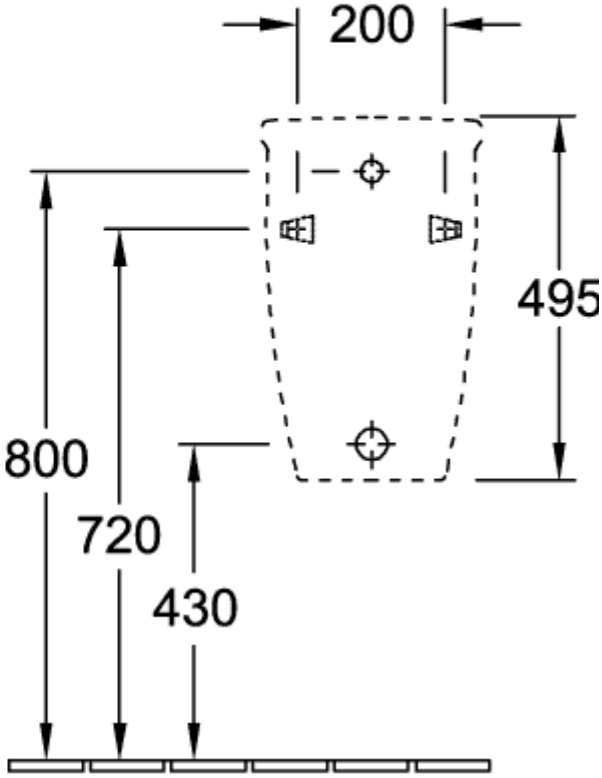
200
495
800
720
430

75570501

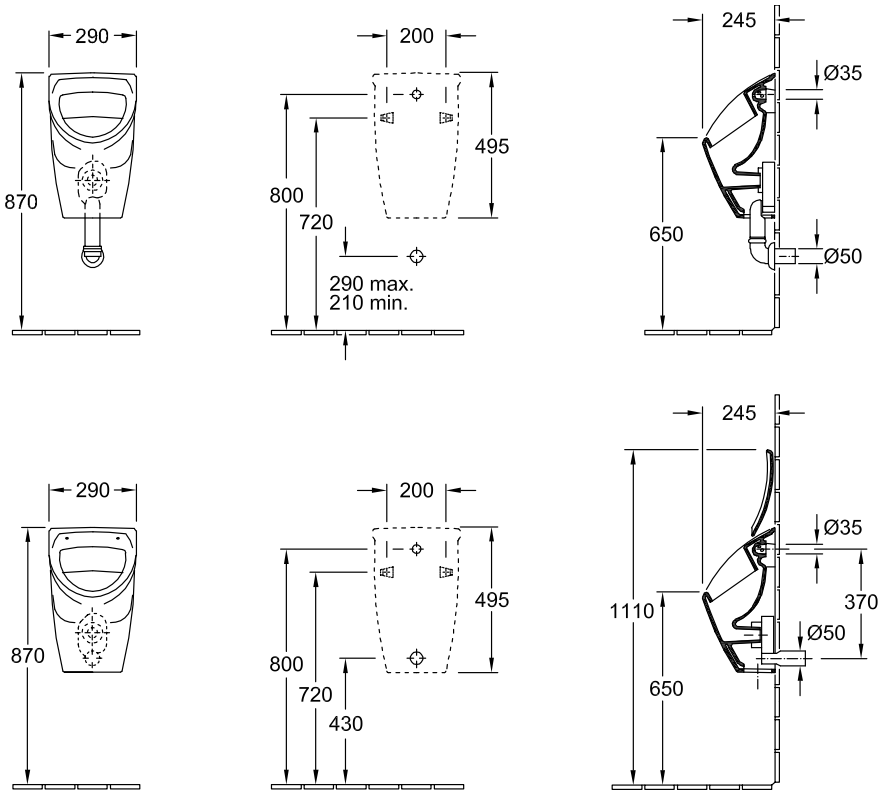
290
870
200
495
800
720
290 max.
210 min.
245
Ø35
650
Ø50
290
870
200
495
800
720
430
245
Ø35
1110
370
Ø50
650