# O.NOVO CORNER HANDWASHBASIN QUARTER CIRCLE

## PRODUCT INFORMATION

| | |
|---|---|
| Article title | Villeroy & Boch O.novo Corner handwashbasin, 400 x 320 x 145 mm, White Alpin, without overflow, unground |
| Article number | 73103301 |
| Assembly / Assembly type | Corner installation |
| Scope of delivery | 1 x corner handwashbasin |
| Depth in mm | 320 |
| Width in mm | 400 |
| Height in mm | 145 |
| Interior depth | 85 |
| Collection | O.novo |
| Suitable for | 1-hole mixer |
| Material | Sanitary ceramics |
| surface | glossy |
| Colour name | White Alpin |
| With overflow | No |
| Shape | Quarter circle |
| Colour designation | White Alpin |
| Antibacterial surface (with AntiBac) | No |
| Easy surface cleaning (CeramicPlus) | No |
| Number of tap holes punched through | 1 |
| Underside of washbasin | unground |
| Number of bowls | 1 |

## TECHNICAL DRAWINGS

**73103301**

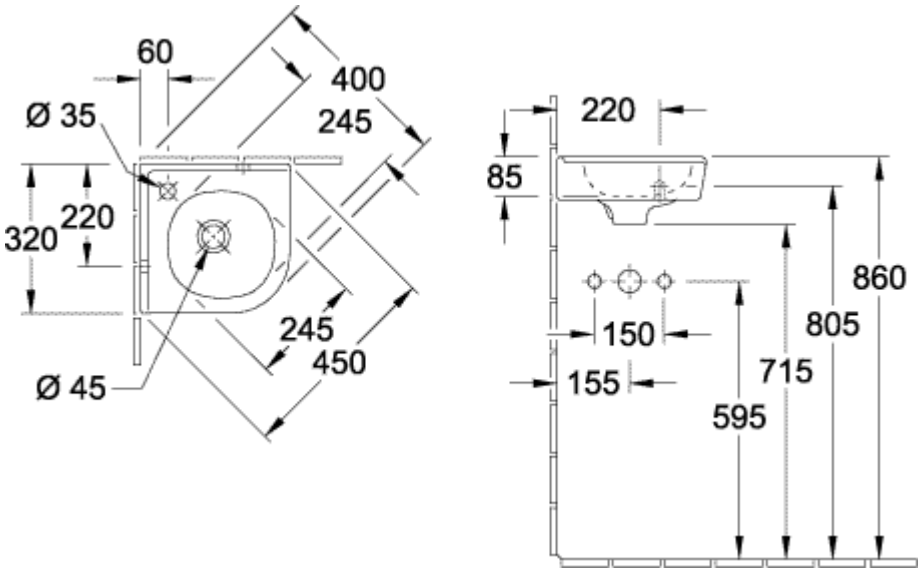

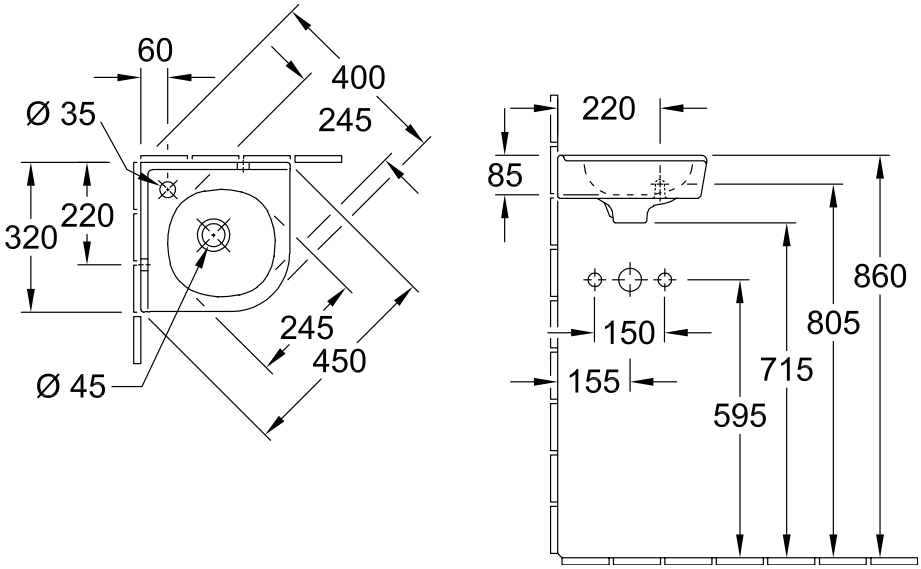
**73103301**