LOOP & FRIENDS UNDERCOUNTER WASHBASIN ROUND

PRODUCT INFORMATION

Article title	Villeroy & Boch Loop & Friends Undercounter washbasin, 380 x 380 x 210 mm, White Alpin, without overflow
Article number	61813801
Assembly / Assembly type	Undercounter
Assembly instructions	the hole for the washbasin can only be cut out using the original washbasin because tolerances of several millimetres are possible, installation possible in natural stone and laminate countertops
Scope of delivery	1 x undercounter washbasin , 1 x fastening set
Depth in mm	380
Width in mm	380
Height in mm	210
Interior depth	160
Diameter in mm	380
Collection	Loop & Friends
Tap fitting / Tap hole information	Please note: unclosable outlet valve must be used with models without overflow
Material	Sanitary ceramics
surface	glossy
Colour name	White Alpin
With overflow	No
Shape	Round
Colour designation	White Alpin
Antibacterial surface (with AntiBac)	No
Easy surface cleaning (CeramicPlus)	No
Number of bowls	1

TECHNICAL DRAWINGS

61813801

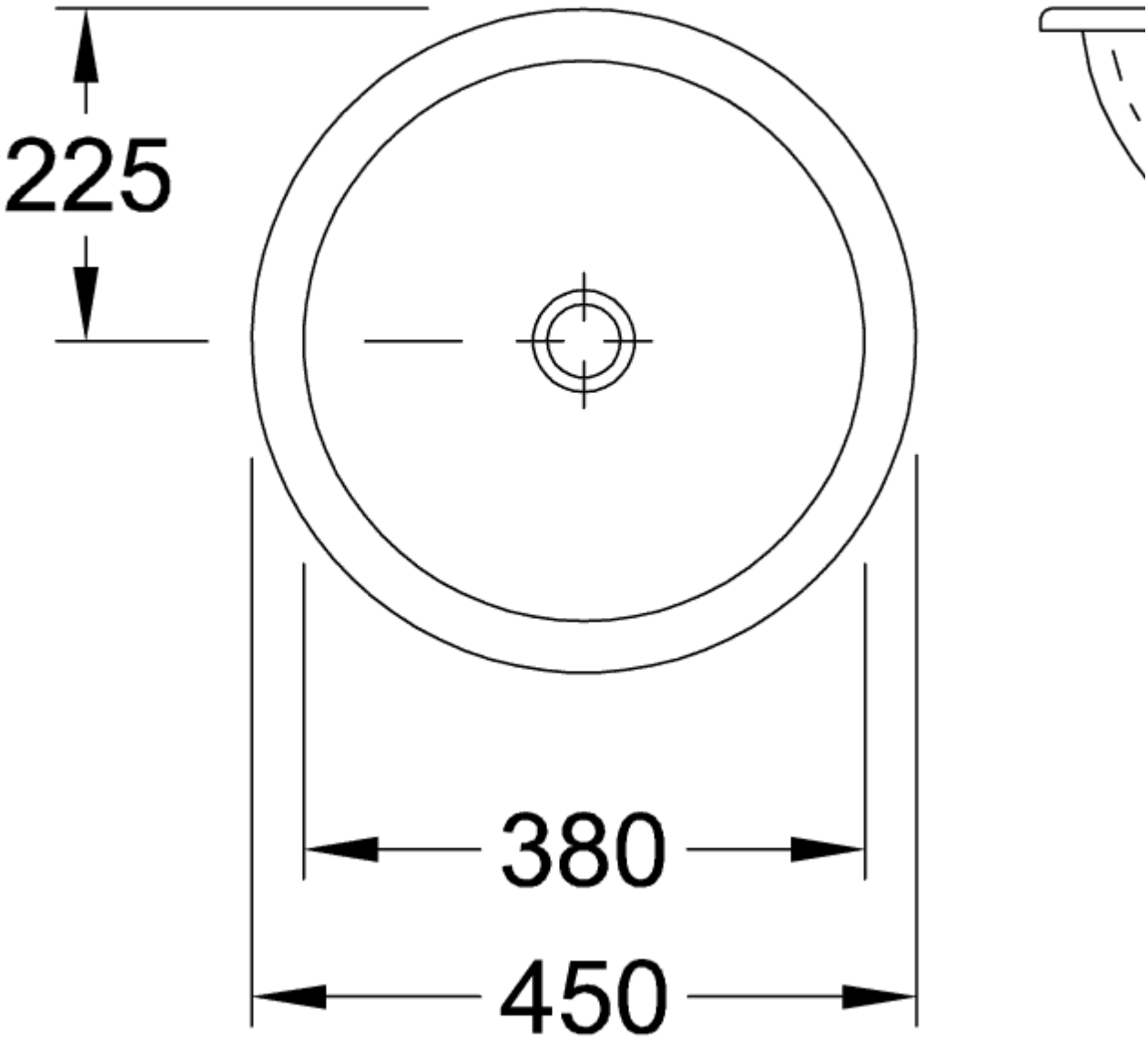

61813801

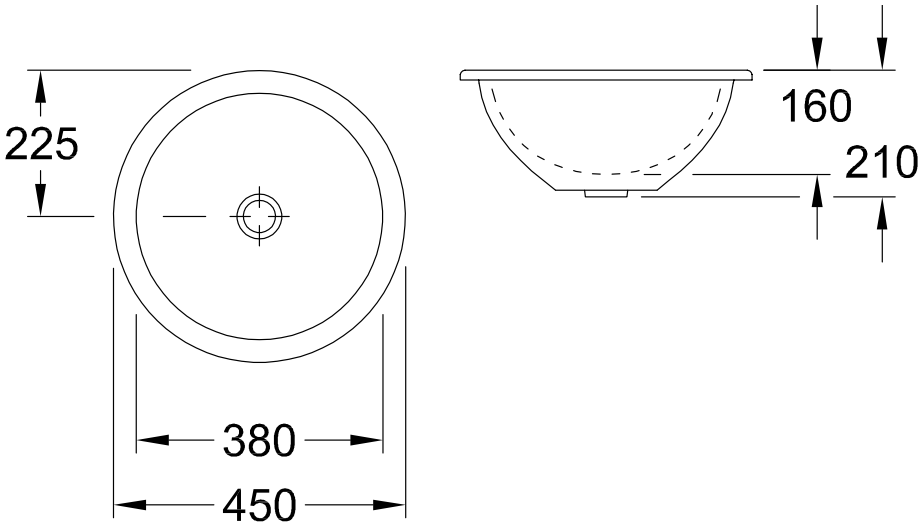

61813801

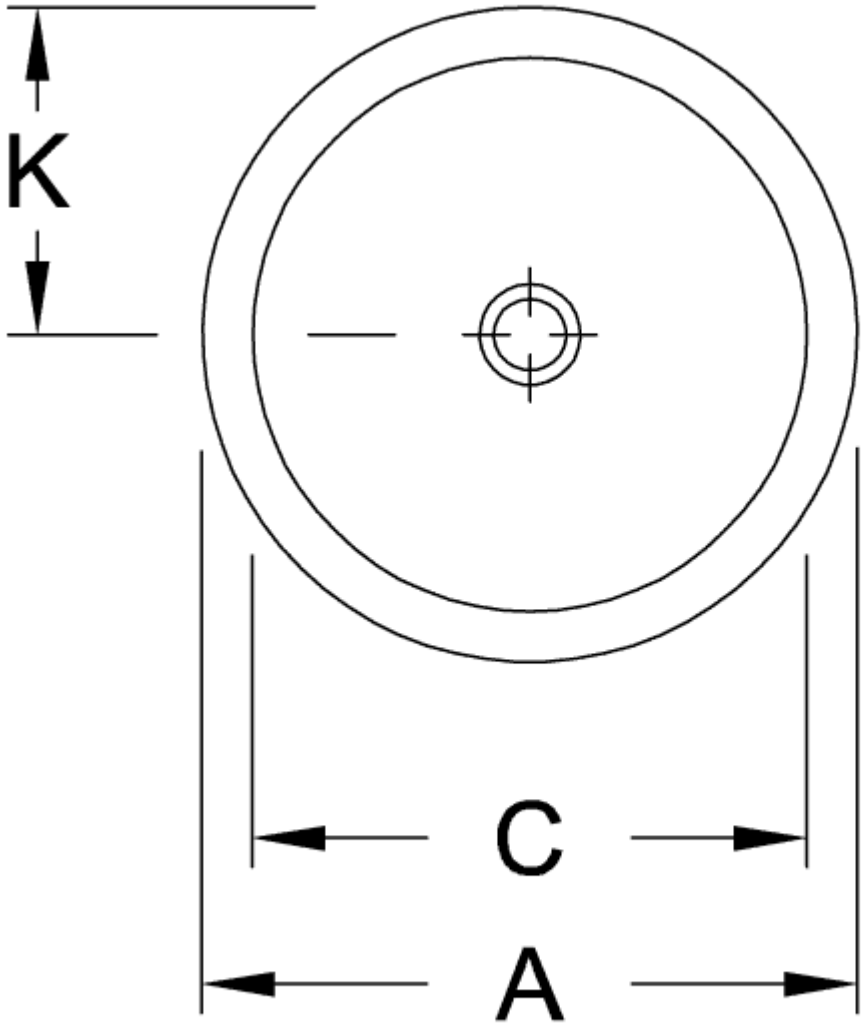

61813801

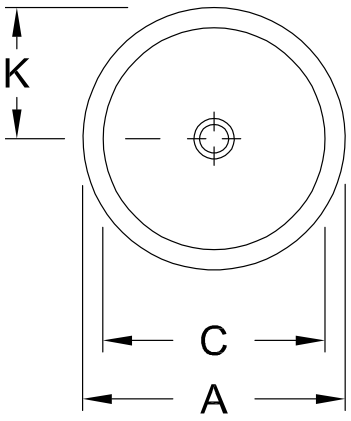

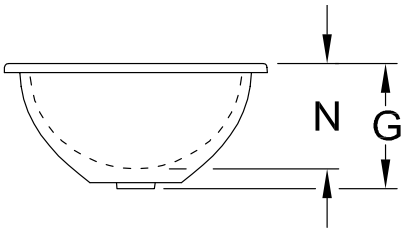

	A	C	G	K	N
6180 43	535	440	230	263	180
6181 43	535	440	230	263	180
6180 38	450	380	210	225	160
6181 38	450	380	210	225	160
6180 33	390	330	190	195	140
6181 33	390	330	190	195	140
6180 28	345	280	165	170	120
6181 28	345	280	165	170	120