SUBWAY 2.0 CISTERN

PRODUCT INFORMATION

Article title	Villeroy & Boch Subway 2.0 Cistern, water inlet from the sides or rear, White Alpin
Article number	57061101
Scope of delivery	1 x cistern
Depth in mm	165
Width in mm	383
Height in mm	389
Collection	Subway 2.0
Material	Sanitary ceramics
Colour name	White Alpin
Other material	Push button: ABS Flushing mechanism: Plastic
Other surfaces	Push button: chrome, glossy, Flushing mechanism: glossy
Colour designation	White Alpin
Other colour designations	Push button: Chrome, Flushing mechanism: White Alpin

TECHNICAL DRAWINGS

57061101

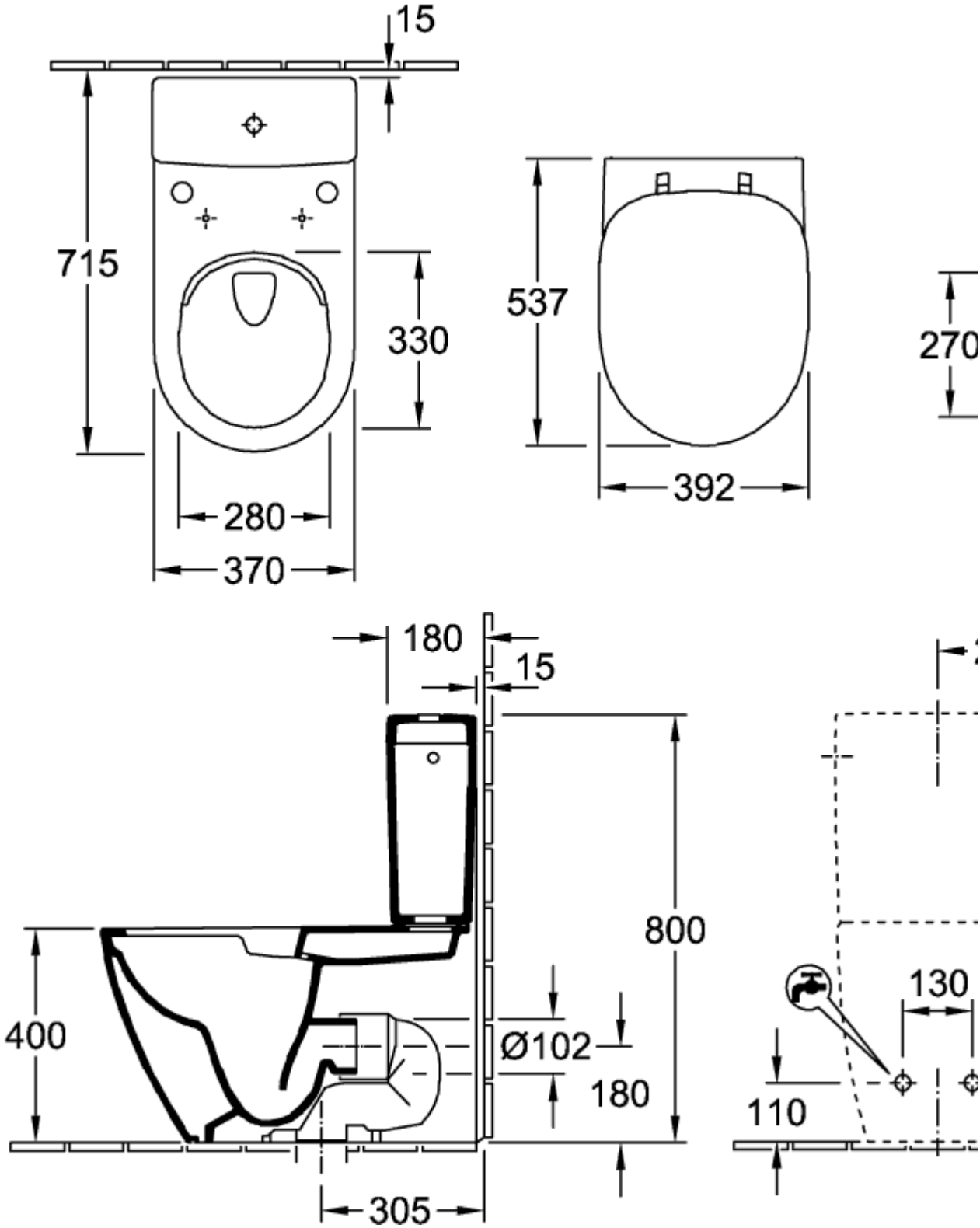

57061101

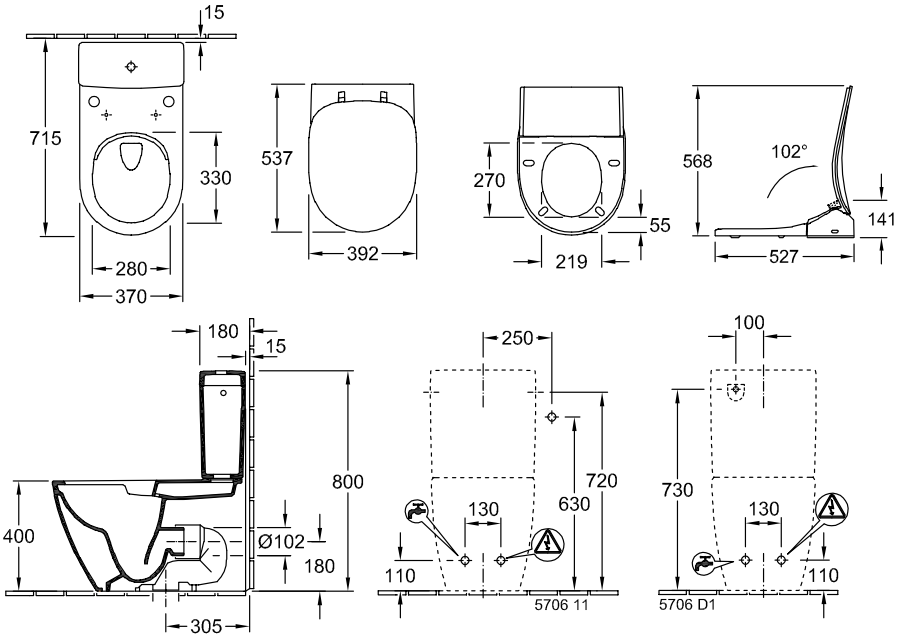

57061101

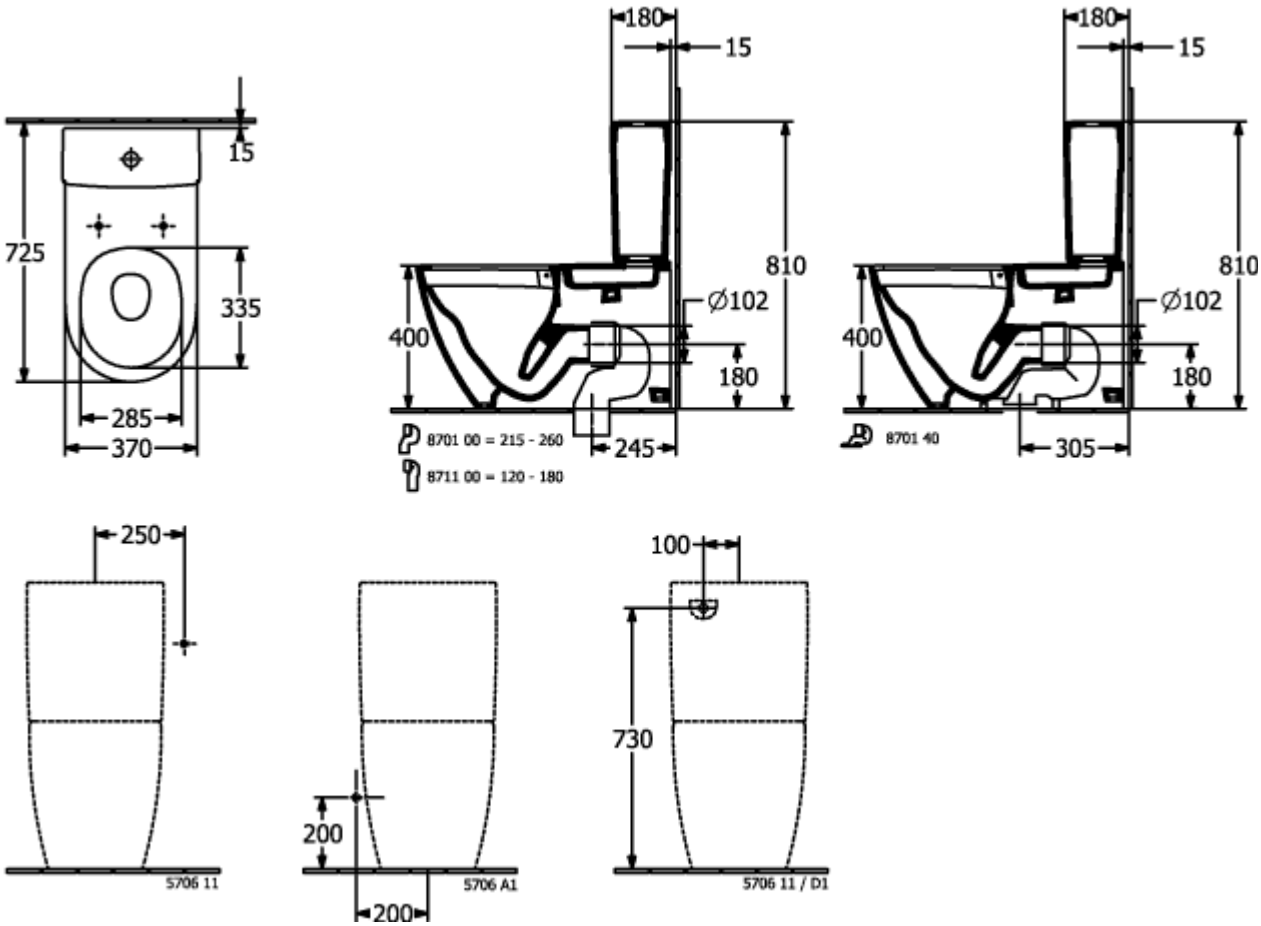

57061101

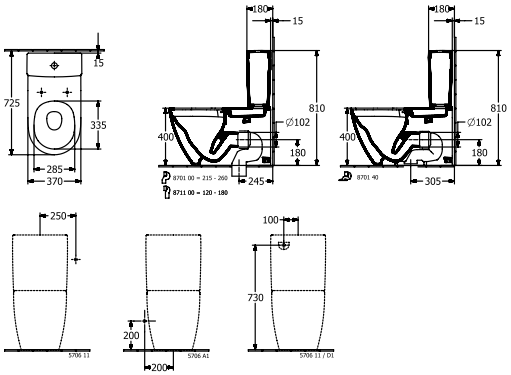
15
725
335
285
370
180
15
810
Ø102
400
180
245
8701 00 = 215 - 260
8711 00 = 120 - 180
180
15
810
Ø102
400
180
305
8701 40
250
5706 11
200
200
5706 A1
100
730
5706 11 / 01

57061101

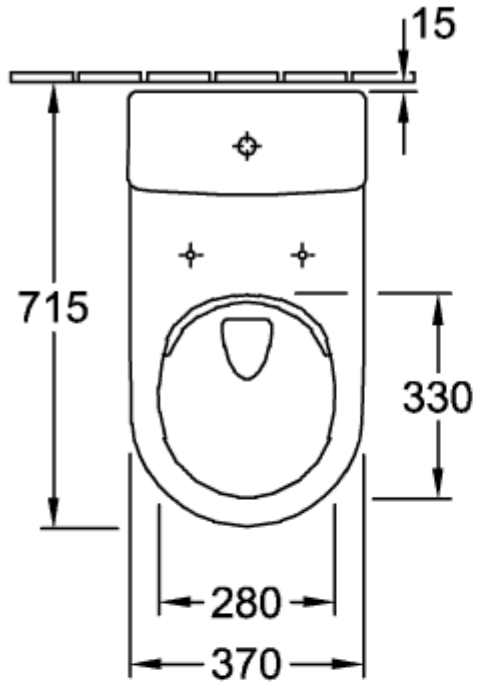
15
715
330
280
370

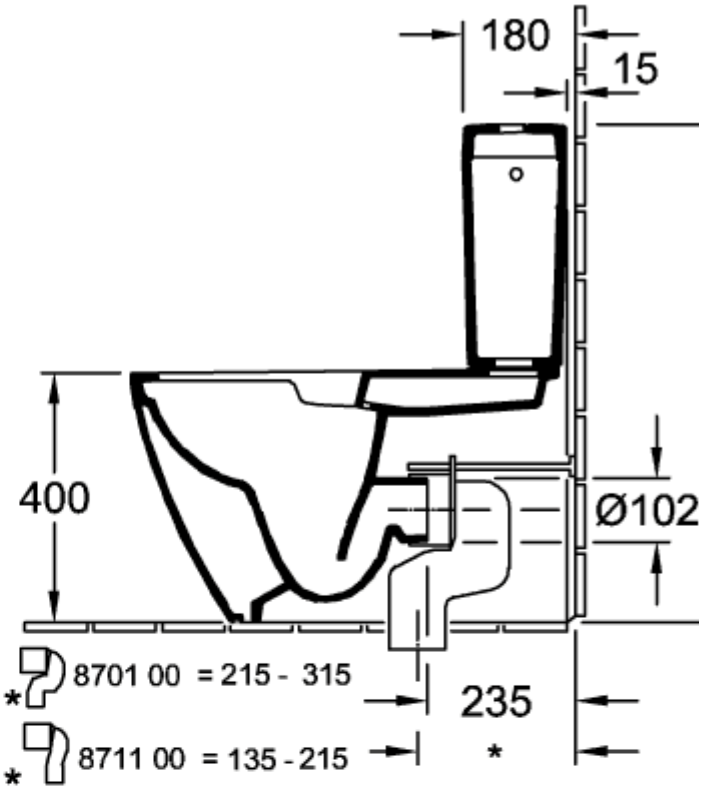
180
15
400
Ø102
8701 00 = 215 - 315
8711 00 = 135 - 215
235
*

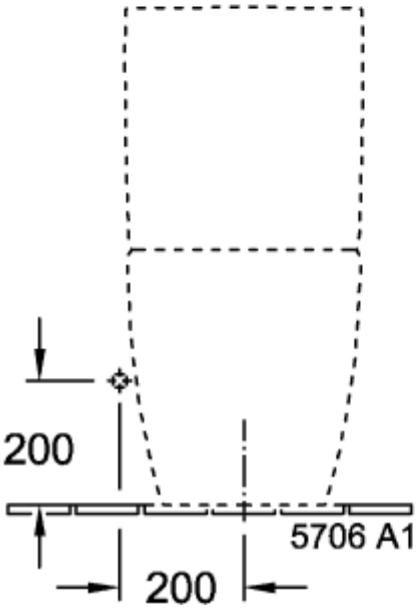
200
200
5706 A1

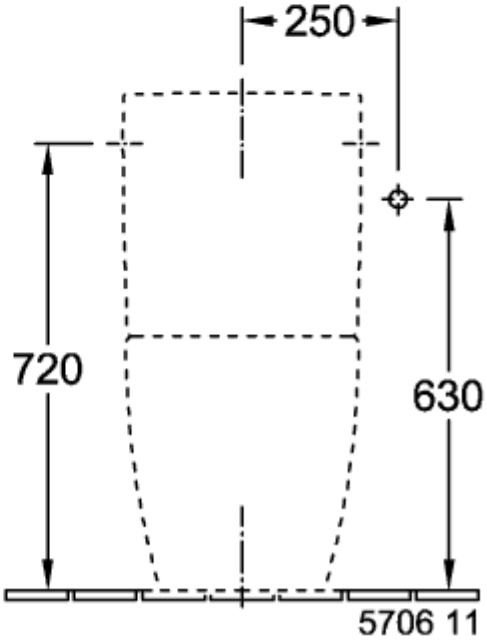
250
720
630
5706 11

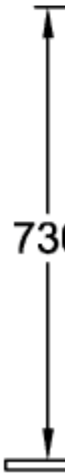

57061101

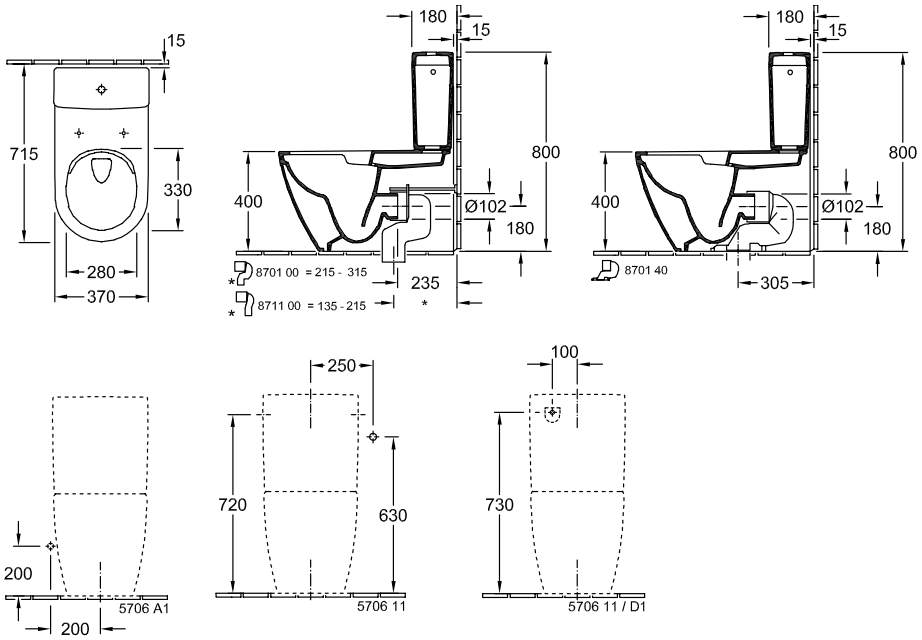
15
715
330
280
370
180
15
800
400
Ø102
180
8701 00 = 215 - 315
235
8711 00 = 135 - 215
180
15
800
400
Ø102
180
8701 40
305
250
720
630
5706 11
100
730
5706 11 / D1
200
5706 A1
200