ARCHITECTURA WASHDOWN TOILET OVAL

PRODUCT INFORMATION

Article title	Villeroy & Boch Architectura Washdown toilet, wall-mounted, White Alpin
Article number	56841001
Assembly / Assembly type	wall-mounted
Scope of delivery	1 x washdown toilet
Depth in mm	530
Width in mm	370
Height in mm	330
Collection	Architectura
Suitable for	Concealed cistern
Innovative flushing technology (with TwistFlush)	No
Flush volume l	3 / 4,5 l
Wall-mounted - floor-standing	wall-mounted
Material	Sanitary ceramics
surface	glossy
Colour name	White Alpin
Shape	Oval
Colour designation	White Alpin
Antibacterial surface (with AntiBac)	No
Easy surface cleaning (CeramicPlus)	No
Rimless (mit DirectFlush)	No
Flush type	Washdown toilet
Integrated freshness solution (with ViFresh)	No
Outlet / outlet	horizontal outlet

TECHNICAL DRAWINGS

56841001

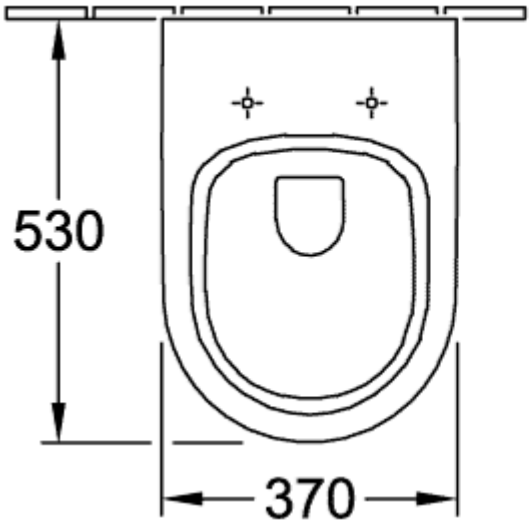

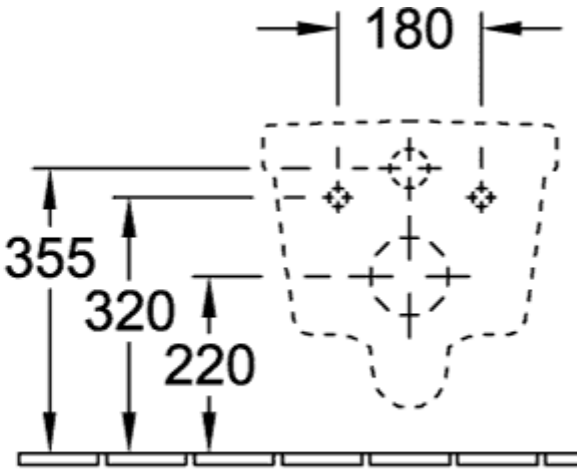
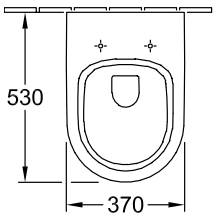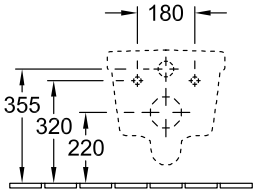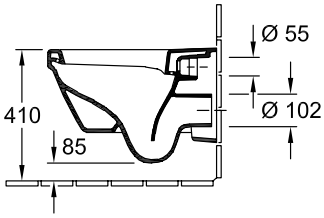
56841001