ARCHITECTURA VITA VITA WASHDOWN TOILET

PRODUCT INFORMATION

Article title	Villeroy & Boch Architectura Vita Vita washdown toilet, with AntiBac, White Alpin AntiBac
Article number	567810T1
Depth in mm	710
Width in mm	370
Height in mm	385
Collection	Architectura Vita
Innovative flushing technology (with TwistFlush)	No
Flush volume l	3 / 6 l
Colour name	White Alpin AntiBac
Colour designation	White Alpin
Antibacterial surface (with AntiBac)	Yes
Easy surface cleaning (CeramicPlus)	No
Rimless (mit DirectFlush)	No
Integrated freshness solution (with ViFresh)	No
Outlet / outlet	horizontal outlet

TECHNICAL DRAWINGS

567810T1

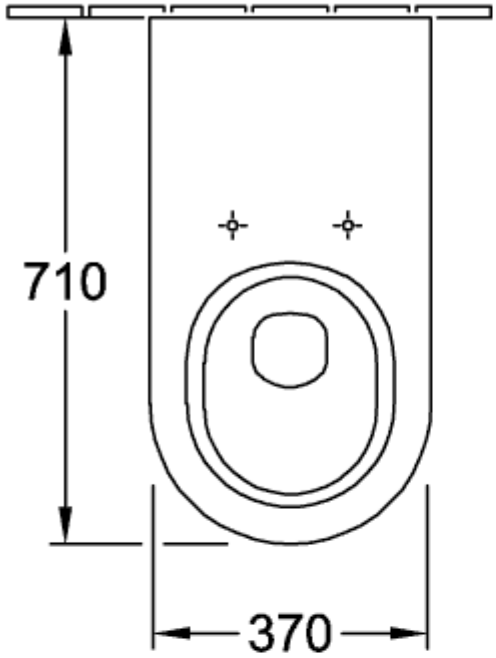

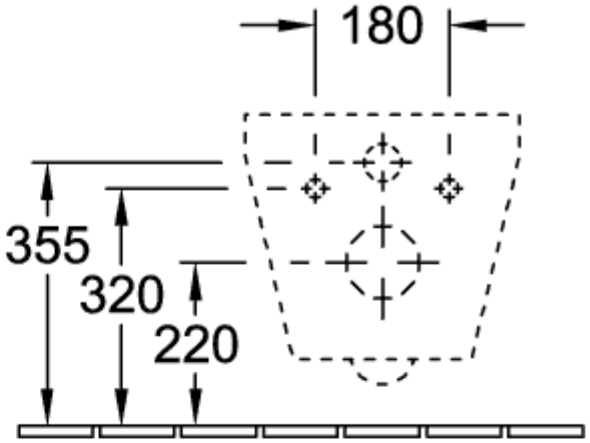

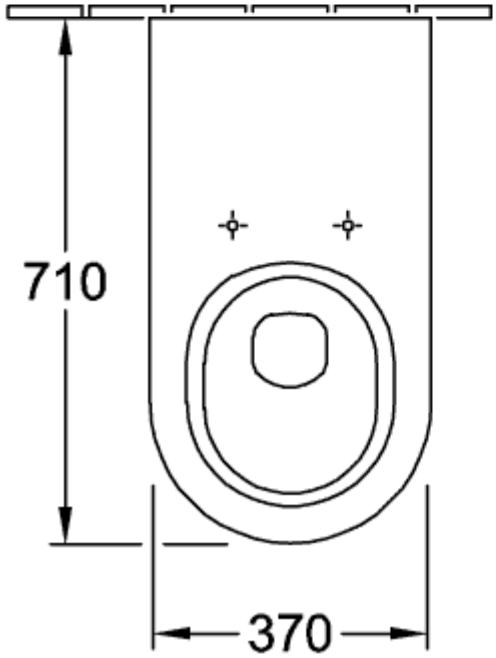

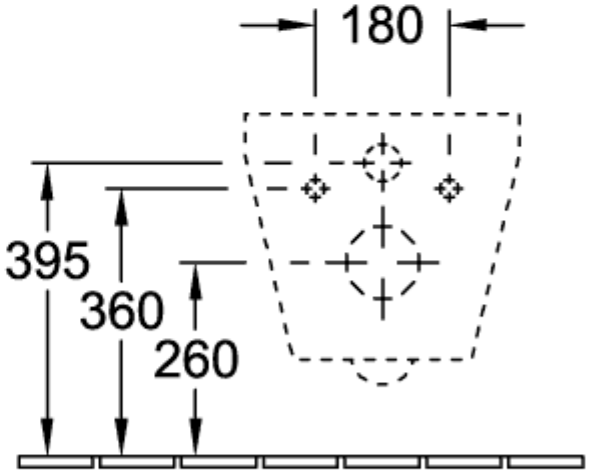

567810T1

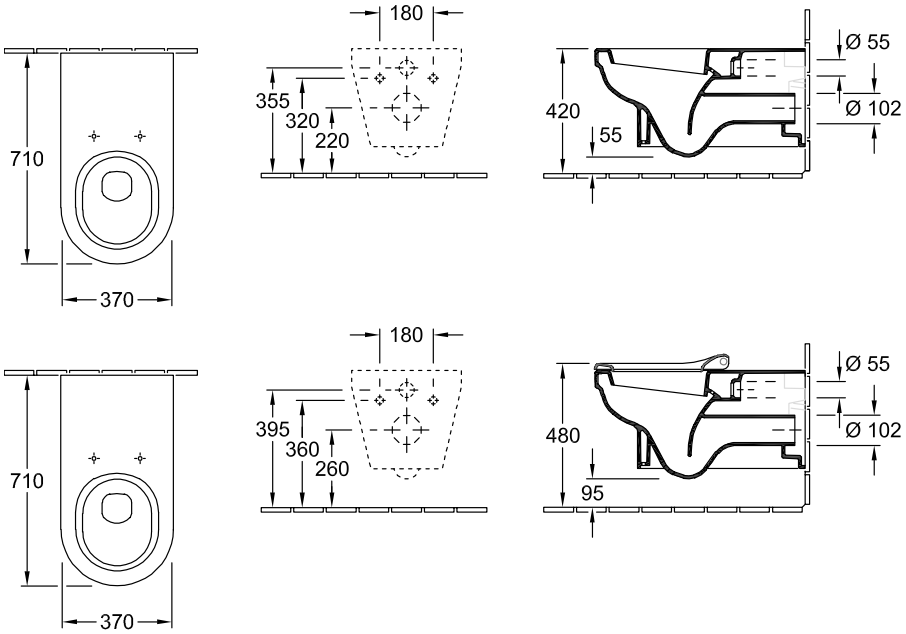
180
710
370
355
320
220
420
55
Ø 55
Ø 102
180
710
370
395
360
260
480
95
Ø 55
Ø 102