SUBWAY 2.0 WASHDOWN TOILET OVAL

PRODUCT INFORMATION

Article title	Villeroy & Boch Subway 2.0 Washdown toilet, wall-mounted, White Alpin CeramicPlus
Article number	560050R1
Assembly / Assembly type	wall-mounted
Depth in mm	565
Width in mm	375
Height in mm	360
Collection	Subway 2.0
Suitable for	Concealed cistern
Innovative flushing technology (with TwistFlush)	No
Flush volume l	3 / 4,5 l
Wall-mounted - floor-standing	wall-mounted
Material	Sanitary ceramics
surface	glossy
Colour name	White Alpin CeramicPlus
Shape	Oval
Colour designation	White Alpin
Antibacterial surface (with AntiBac)	No
Easy surface cleaning (CeramicPlus)	Yes
Rimless (mit DirectFlush)	No
Flush type	Washdown toilet
Integrated freshness solution (with ViFresh)	No
Outlet / outlet	horizontal outlet

TECHNICAL DRAWINGS

560050R1

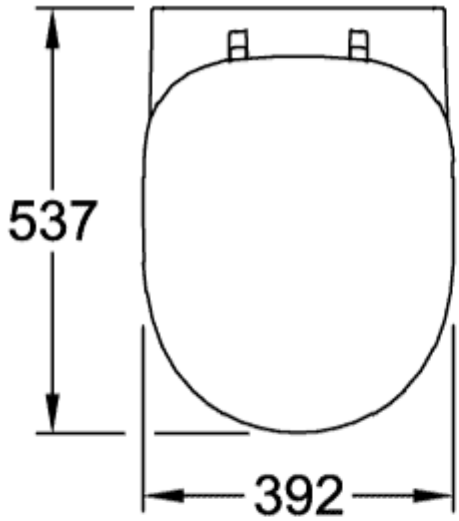

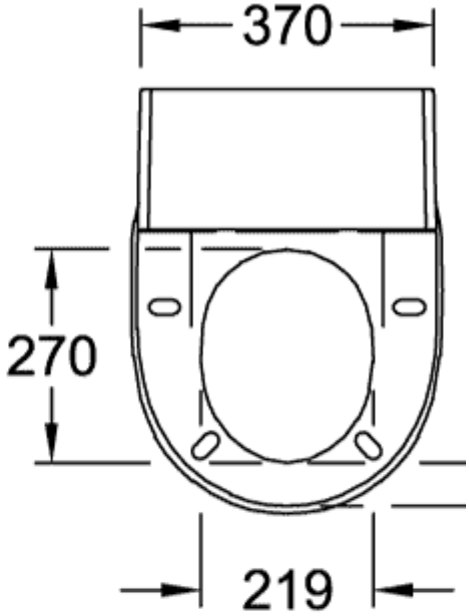

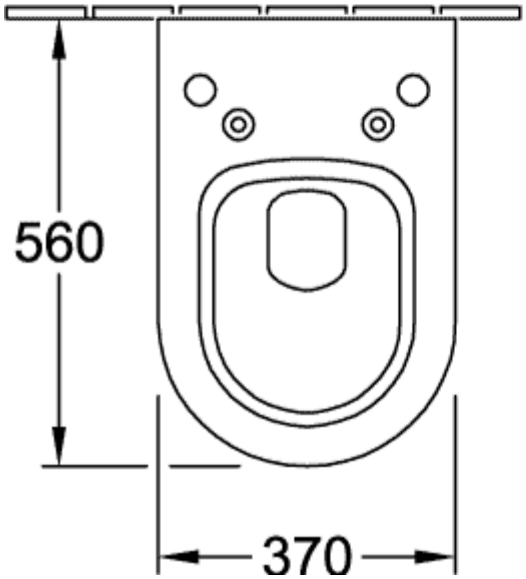

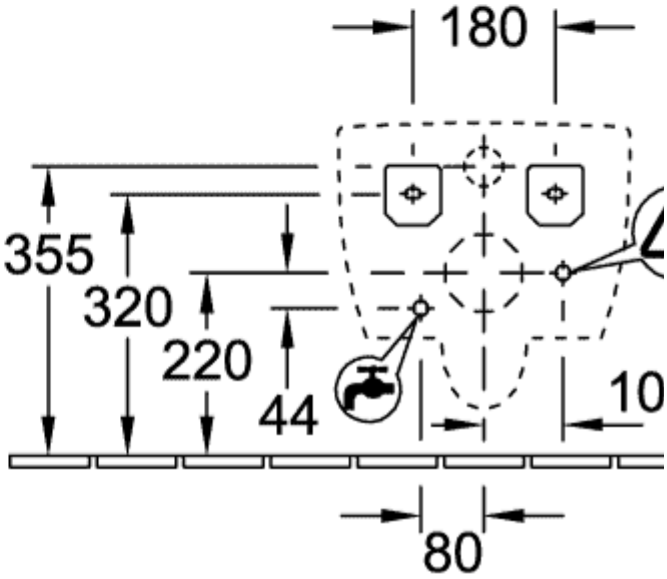

560050R1

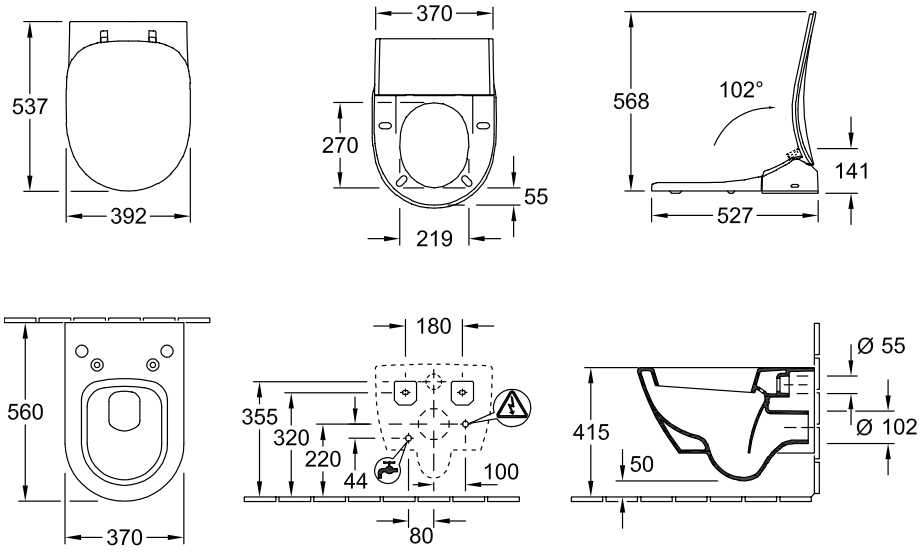
537
392
370
270
55
219
568
102°
141
527
560
370
180
355
320
220
44
100
80
415
50
Ø 55
Ø 102