MEMENTO 2.0 WASHBASIN RECTANGLE

PRODUCT INFORMATION

Article title	Villeroy & Boch Memento 2.0 Washbasin, 1200 x 470 x 150 mm, White Alpin, with overflow
Article number	4A22C501
Assembly / Assembly type	wall-mounted
Scope of delivery	1 x washbasin
Depth in mm	470
Width in mm	1200
Height in mm	150
Interior depth	95
Collection	Memento 2.0
Suitable for	3-hole mixer
Material	TitanCeram
surface	glossy
Colour name	White Alpin
With overflow	Yes
Shape	Rectangle
Colour designation	White Alpin
Antibacterial surface (with AntiBac)	No
Easy surface cleaning (CeramicPlus)	No
Number of tap holes punched through	1
Number of tap holes pre-drilled	2
Number of bowls	1

TECHNICAL DRAWINGS

4A22C501

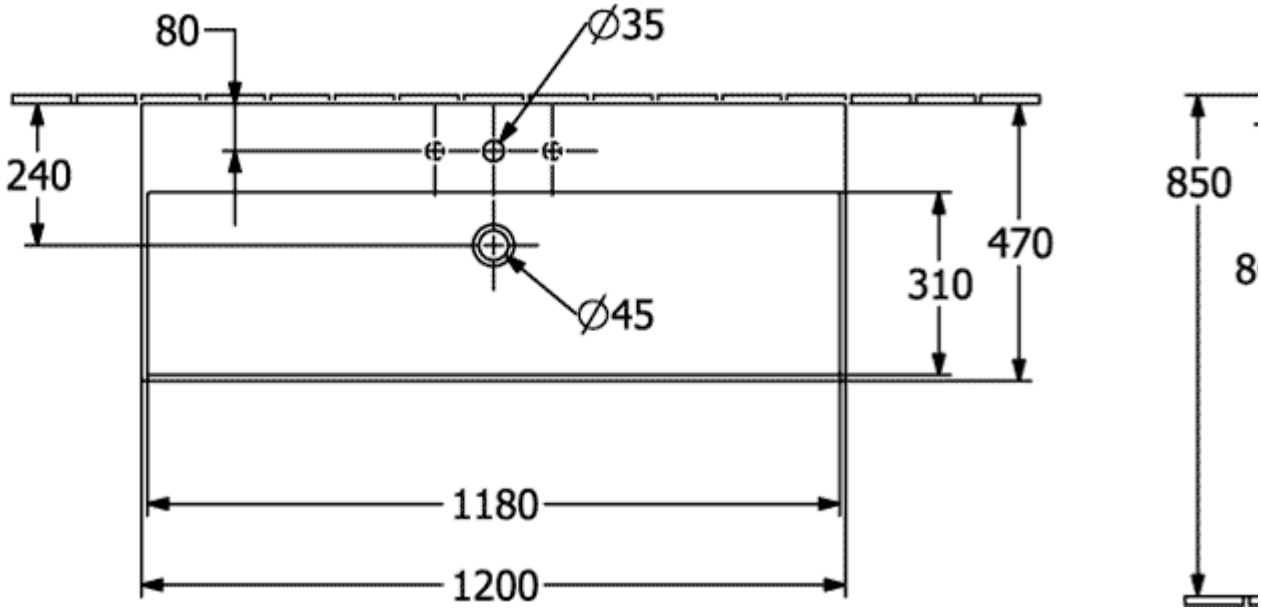
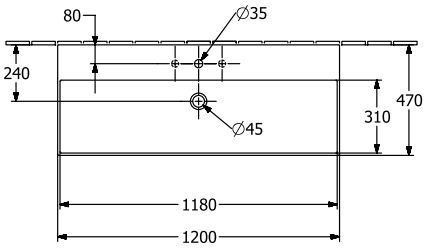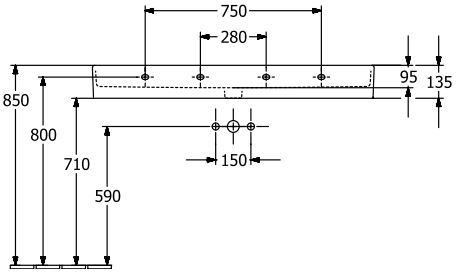
4A22C501