ARCHITECTURA WASHBASIN RECTANGLE

PRODUCT INFORMATION

Article title	Villeroy & Boch Architectura Washbasin, 650 x 470 x 180 mm, White Alpin, with overflow, ground
Article number	4188KG01
Assembly / Assembly type	wall-mounted
Scope of delivery	1 x washbasin , 1 x cut-out template
Depth in mm	470
Width in mm	650
Height in mm	180
Interior depth	125
Collection	Architectura
Suitable for	3-hole mixer
Material	Sanitary ceramics
surface	glossy
Colour name	White Alpin
With overflow	Yes
Shape	Rectangle
Colour designation	White Alpin
Antibacterial surface (with AntiBac)	No
Easy surface cleaning (CeramicPlus)	No
Number of tap holes punched through	1
Number of tap holes pre-drilled	2
Underside of washbasin	ground
Number of bowls	1

TECHNICAL DRAWINGS

4188KG01

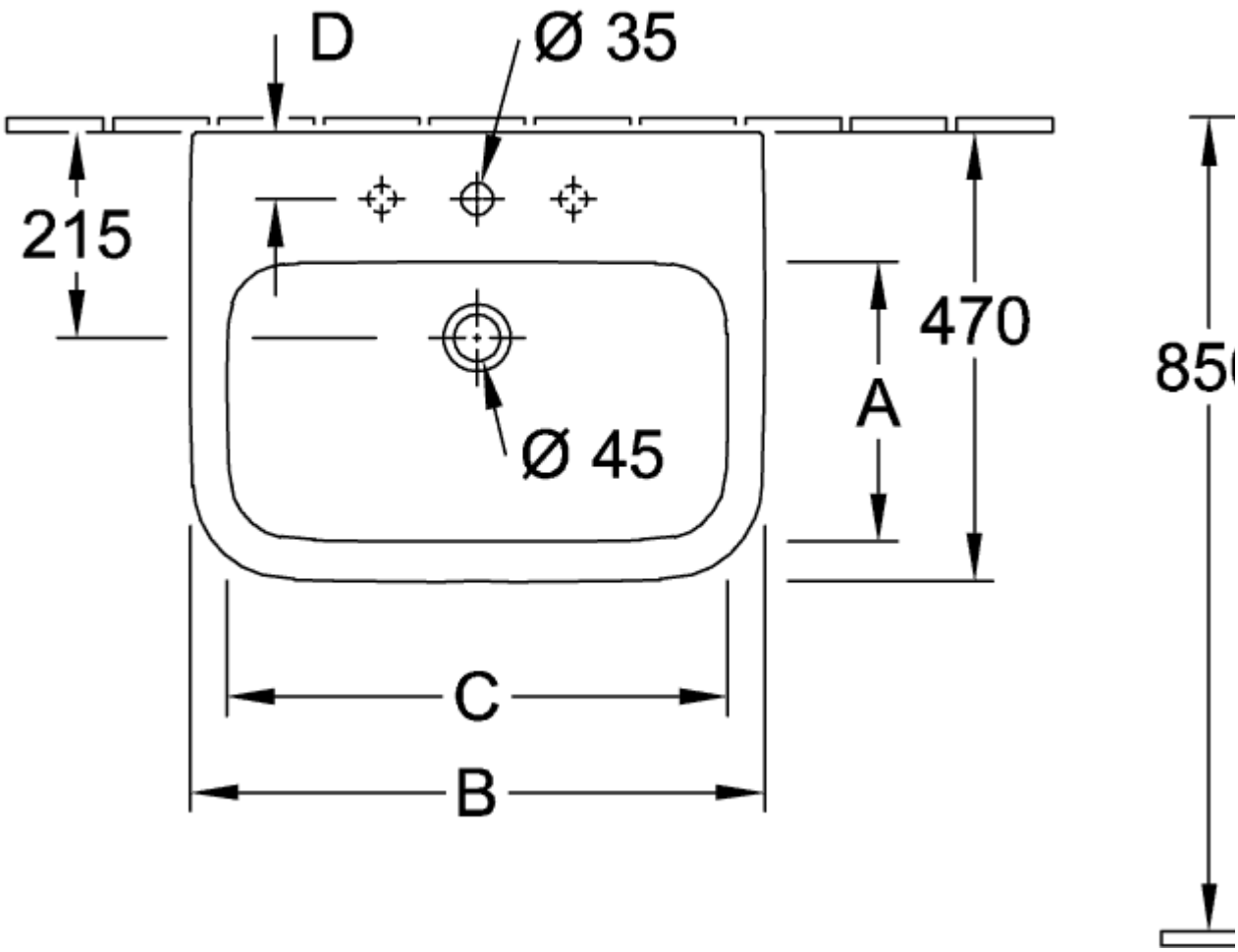

4188KG01

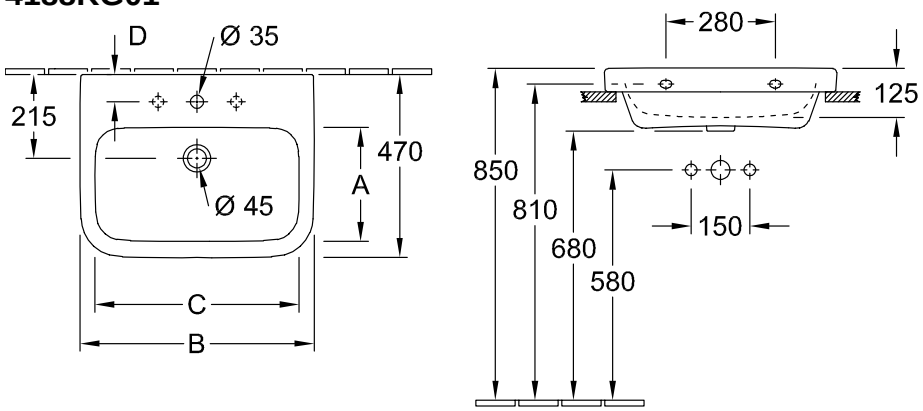

4188KG01

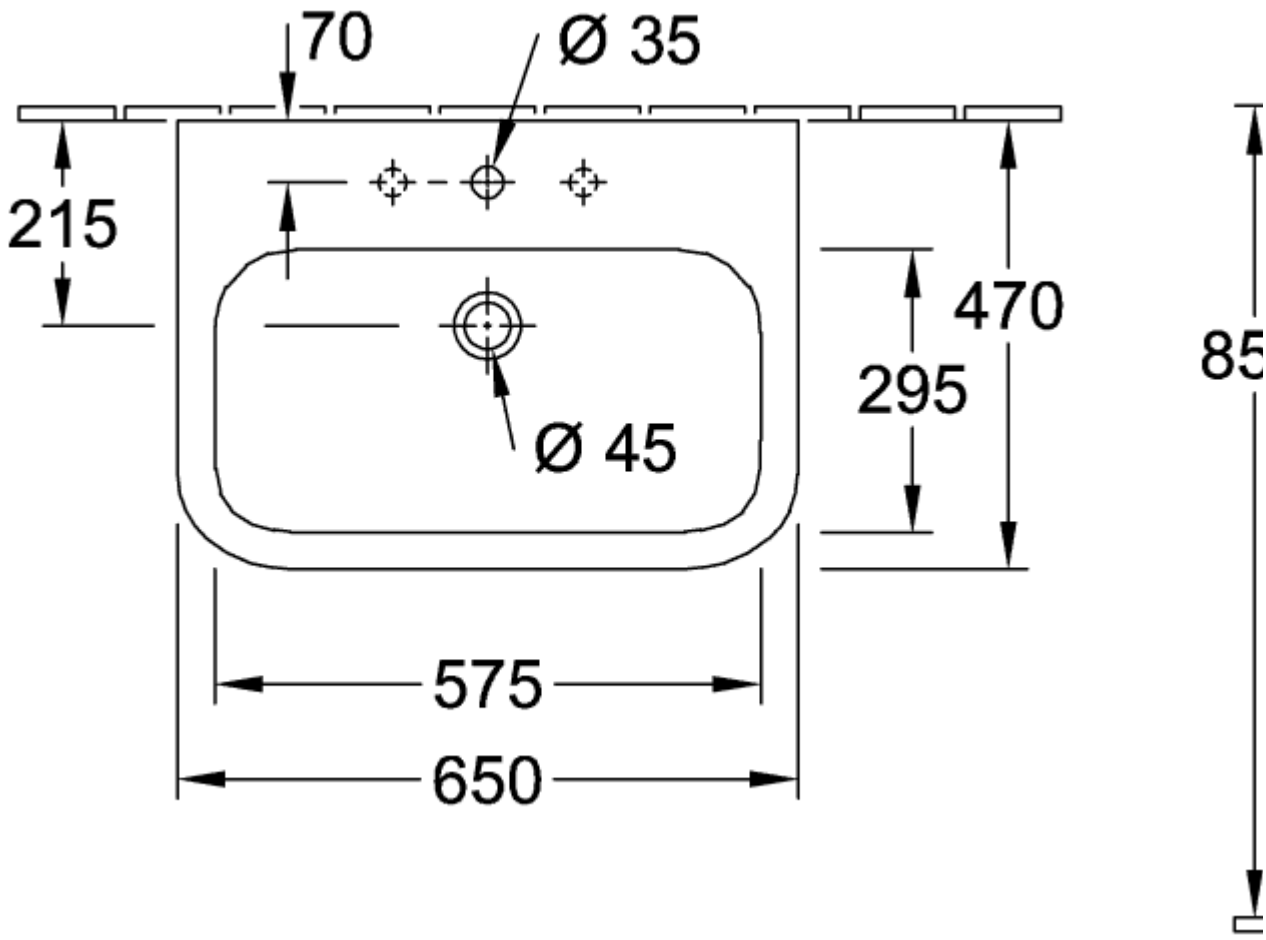
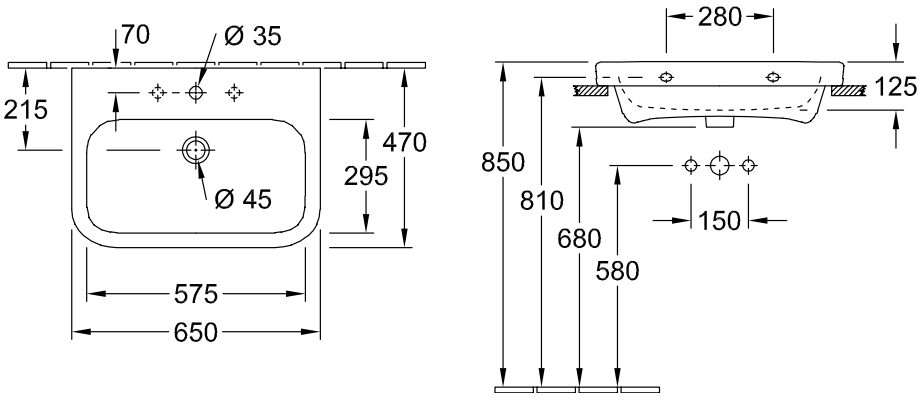
4188KG01