VENTICELLO SEMI-SURFACE-MOUNTED WASHBASIN RECTANGLE

PRODUCT INFORMATION

Article title	Villeroy & Boch Venticello Semi-surface-mounted washbasin, 555 x 360 x 110 mm, White Alpin, with overflow
Article number	41135501
Assembly / Assembly type	Surface-mounted
Assembly instructions	Recommendation: to be installed with a gap of at least 50 mm between the washbasin and the wall
Scope of delivery	1 x semi-surface-mounted washbasin
Depth in mm	360
Width in mm	555
Height in mm	110
Interior depth	117
Collection	Venticello
Suitable for	Wall-mounted tap fittings, Matching Villeroy&Boch furniture|Tap fitting with raised base
Material	Sanitary ceramics
surface	glossy
Colour name	White Alpin
With overflow	Yes
Shape	Rectangle
Colour designation	White Alpin
Antibacterial surface (with AntiBac)	No
Easy surface cleaning (CeramicPlus)	No
Underside of washbasin	unground
Number of bowls	1

TECHNICAL DRAWINGS

41135501

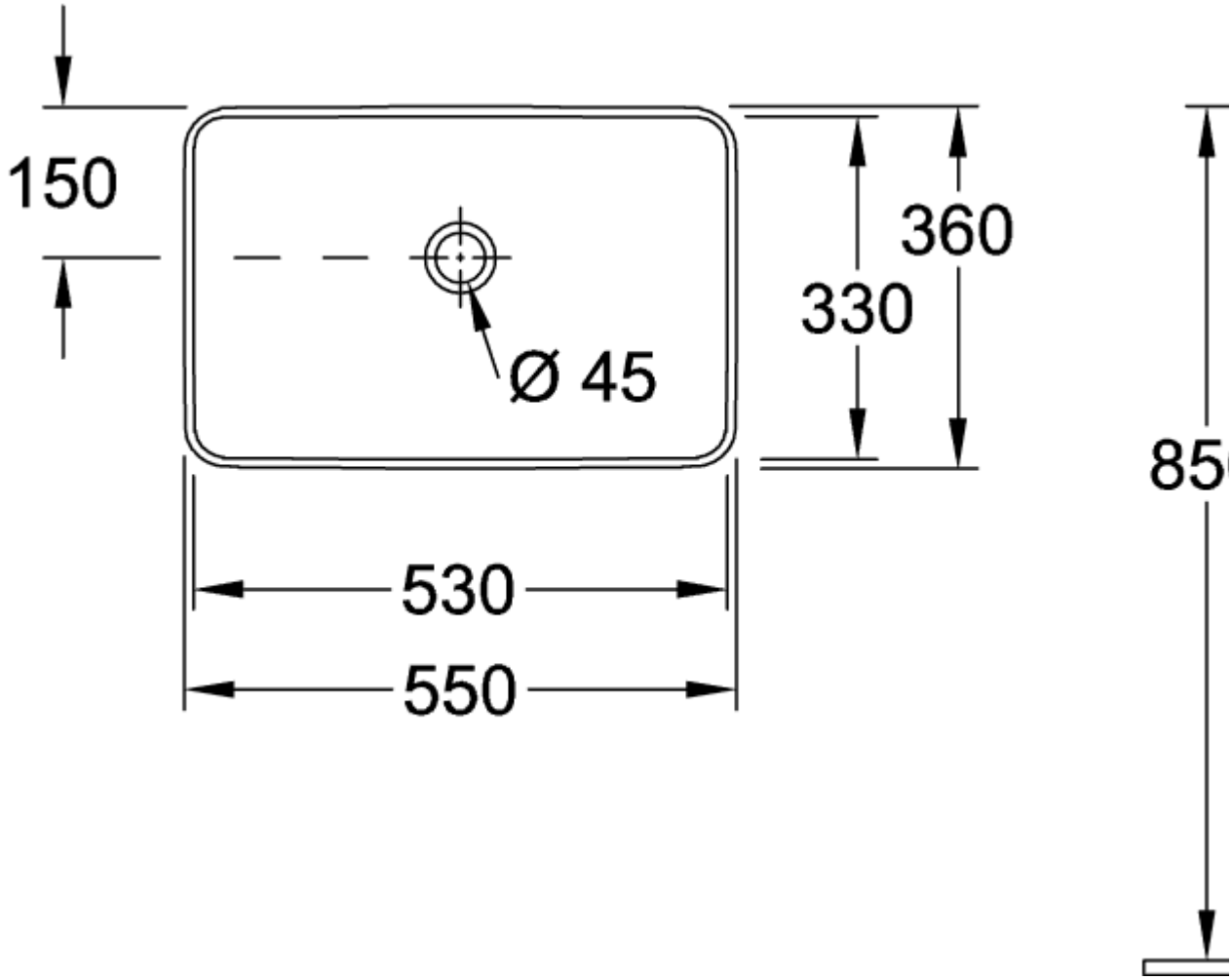
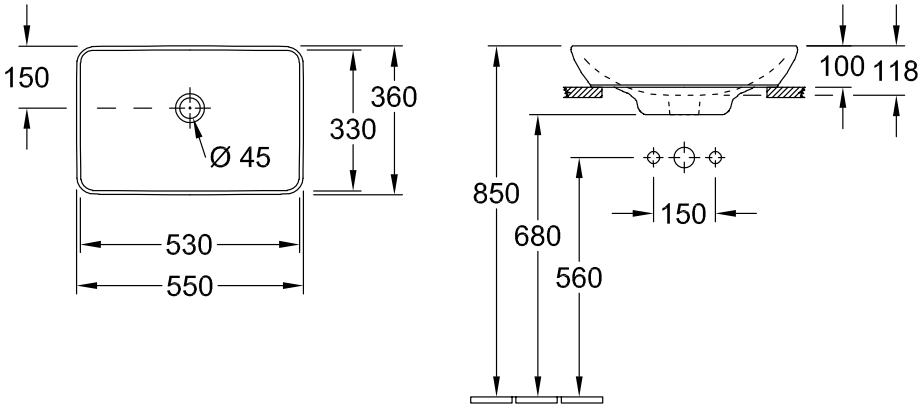
41135501