ARCHITECTURA RECTANGULAR SHOWER TRAY RECTANGLE

PRODUCT INFORMATION

Article title	Villeroy & Boch Architectura Rectangular shower tray, 1400 x 750 x 15 mm, White Alpin
Article number	UDA1475ARA215GV-01
Assembly / Assembly type	Surface-mounted, Corner installation|flush-fitting installation| Installation on a base
Assembly instructions	With MetalRim and an edge height of 15mm, we recommend the use of a composite seal in accordance with ETAG 022 on the floor structure below the shower tray in order to prevent any moisture from penetrating the floor structure., From size 1400 x 900, two supports (U82990000) are required.|The installation height of the shower tray can be reduced by 30 mm if the Viega outlet fitting art. no. 634 100 is used. Please note: this outlet fitting does not conform to EN 274.
Scope of delivery	1 x rectangular shower tray , 1 x outlet cover in White Alpine (01), for matt colours, outlet cover in matching matt colours.
Length in mm	1400
Width in mm	750
Height in mm	15
Interior depth	14
Collection	Architectura
Material	Acrylic
Colour name	White Alpin
Other material	Outlet cover: Acrylic
Other surfaces	Outlet cover: glossy
Shape	Rectangle
Colour designation	White Alpin
Other colour designations	Outlet cover: White Alpin
Antibacterial surface (with AntiBac)	No
Easy surface cleaning (CeramicPlus)	No
With slip resistance	Yes

TECHNICAL DRAWINGS

UDA1475ARA215GV-01

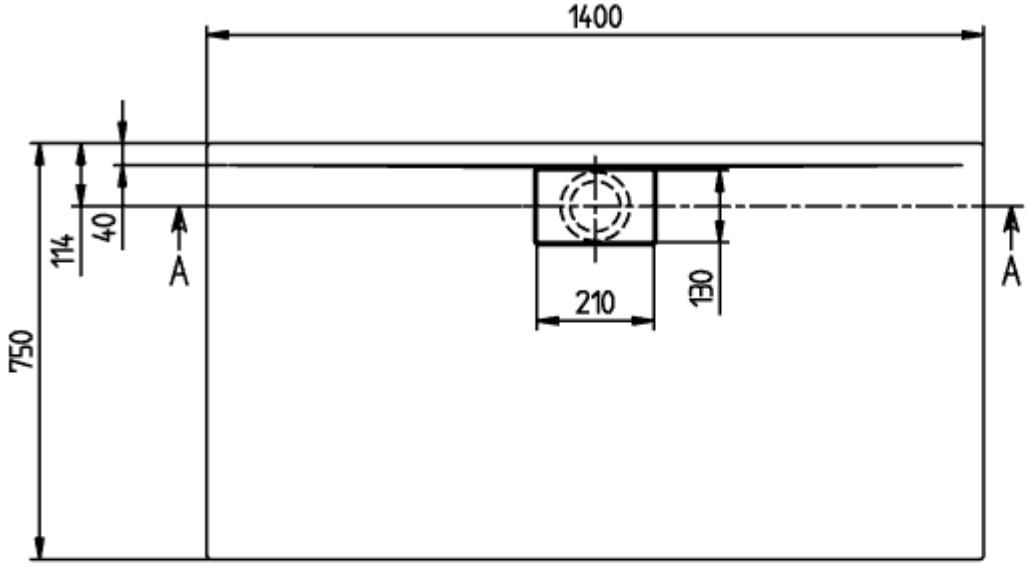

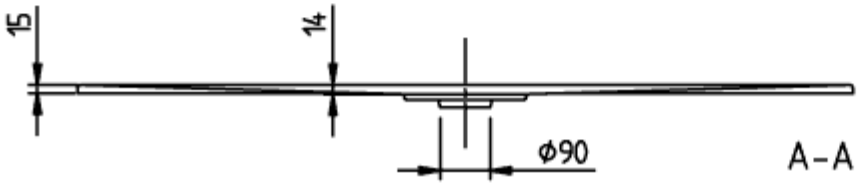

ARCHITECTURA
RIM 1400x750
UDA1475ARA21

V02 / 31-03-2021

UDA1475ARA215GV-01

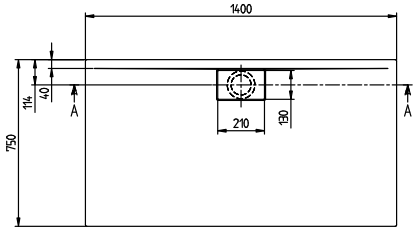

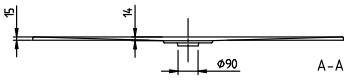

ARCHITECTURA METAL RIM 1400x750 UDA1475ARA215	Villeroy & Boch 1748
V02 / 31-03-2021	