ARCHITECTURA RECTANGULAR SHOWER TRAY RECTANGLE

PRODUCT INFORMATION

Article title	Villeroy & Boch Architectura Rectangular shower tray, 1200 x 800 x 48 mm, Grey
Article number	UDA1280ARA248V-3S
Assembly / Assembly type	Surface-mounted, Corner installation|flush-fitting installation| Installation on a base
Assembly instructions	The installation height of the shower tray can be reduced by 30 mm if the Viega outlet fitting art. no. 634 100 is used. Please note: this outlet fitting does not conform to EN 274., From size 1400 x 900, two supports (U82990000) are required.
Scope of delivery	1 x rectangular shower tray , 1 x outlet cover in White Alpine (01), for matt colours, outlet cover in matching matt colours.
Length in mm	1200
Width in mm	800
Height in mm	48
Interior depth	15
Collection	Architectura
Material	Acrylic
Colour name	Grey
Other material	Outlet cover: Acrylic
Other surfaces	Outlet cover: matt
Shape	Rectangle
Colour designation	Grey
Other colour designations	Outlet cover: Grey
Antibacterial surface (with AntiBac)	No
Easy surface cleaning (CeramicPlus)	No
With slip resistance	No

TECHNICAL DRAWINGS

UDA1280ARA248V-3S

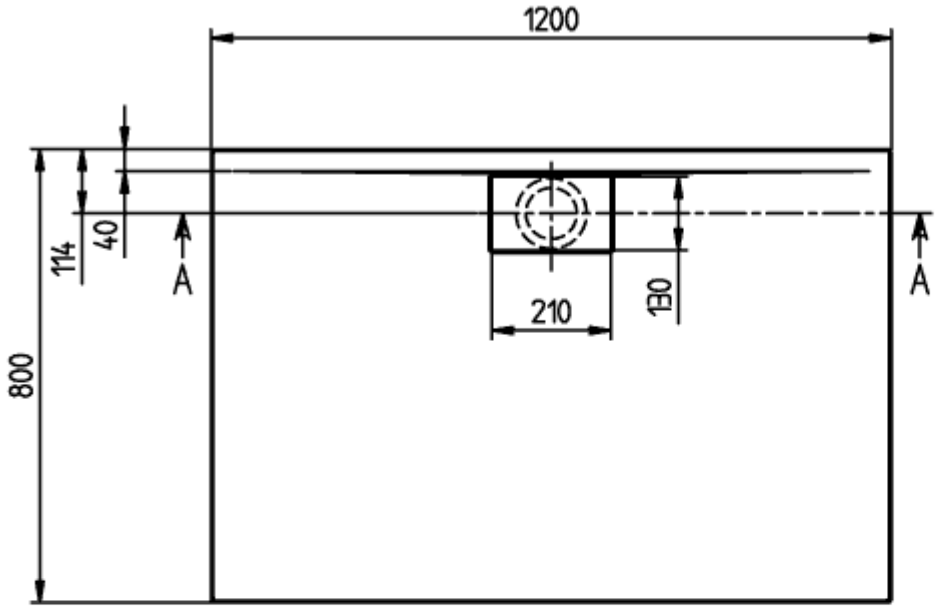

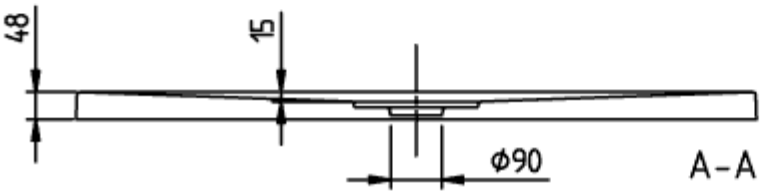

ARCHITECTURA META
RIM 1200x800
UDA1280ARA248

V02 / 31-03-2021
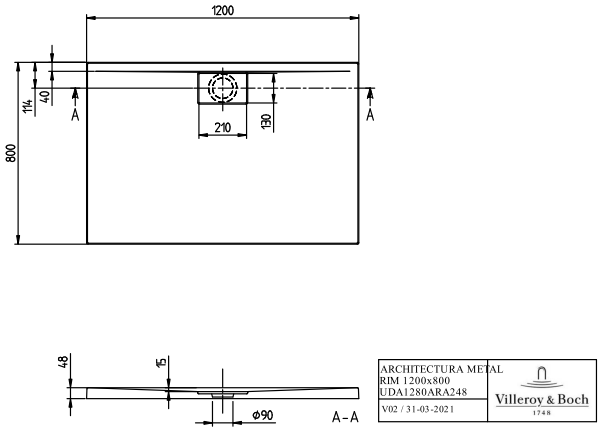
UDA1280ARA248V-3S