# ARCHITECTURA RECTANGULAR SHOWER TRAY RECTANGLE

## PRODUCT INFORMATION



| | |
|---|---|
| Article title | Villeroy & Boch Architectura Rectangular shower tray, 1200 x 750 x 15 mm, White Alpin |
| Article number | UDA1275ARA215V-01 |
| Assembly / Assembly type | Surface-mounted, Corner installation\|flush-fitting installation\| Installation on a base |
| Assembly instructions | With MetalRim and an edge height of 15mm, we recommend the use of a composite seal in accordance with ETAG 022 on the floor structure below the shower tray in order to prevent any moisture from penetrating the floor structure., From size 1400 x 900, two supports (U82990000) are required.\|The installation height of the shower tray can be reduced by 30 mm if the Viega outlet fitting art. no. 634 100 is used. Please note: this outlet fitting does not conform to EN 274. |
| Scope of delivery | 1 x rectangular shower tray , 1 x outlet cover in White Alpine (01), for matt colours, outlet cover in matching matt colours. |
| Length in mm | 1200 |
| Width in mm | 750 |
| Height in mm | 15 |
| Interior depth | 14 |
| Collection | Architectura |
| Material | Acrylic |
| Colour name | White Alpin |
| Other material | Outlet cover: Acrylic |
| Other surfaces | Outlet cover: glossy |
| Shape | Rectangle |
| Colour designation | White Alpin |
| Other colour designations | Outlet cover: White Alpin |
| Antibacterial surface (with AntiBac) | No |
| Easy surface cleaning (CeramicPlus) | No |
| With slip resistance | No |

## TECHNICAL DRAWINGS

**UDA1275ARA215V-01**

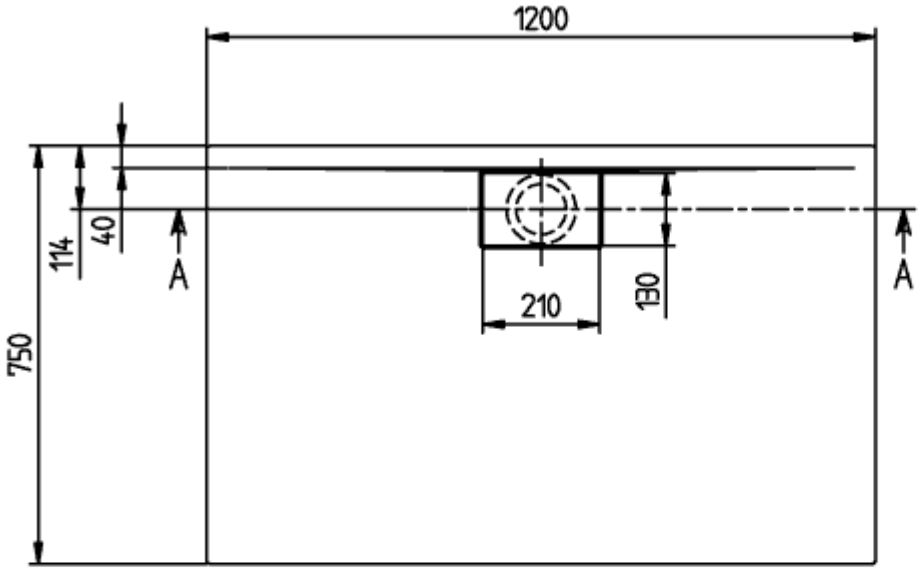


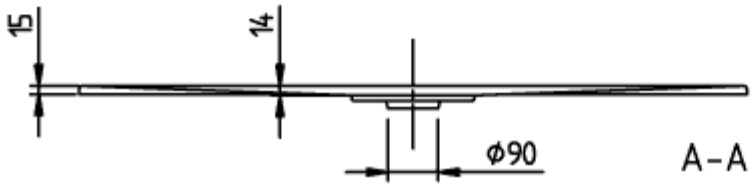


ARCHITECTURA METAL
RIM 1200x750
UDA1275ARA215
V02 / 31-03-2021

# UDA1275ARA215V-01

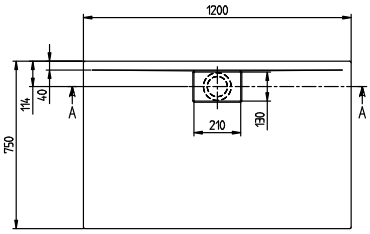


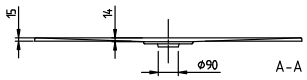


| | |
|---|---|
| ARCHITECTURA METAL<br>RIM 1200x750<br>UDA1275ARA215 | Villeroy & Boch<br>1748 |
| V02 / 31-03-2021 | |