ARCHITECTURA SQUARE SHOWER TRAY SQUARE

PRODUCT INFORMATION

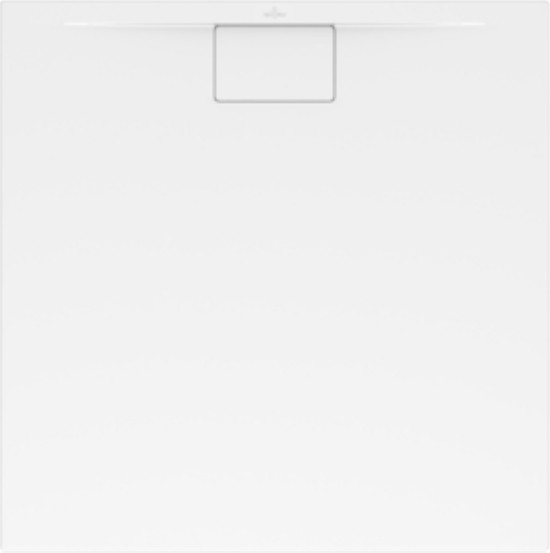

Article title	Villeroy & Boch Architectura Square shower tray, 1000 x 1000 x 15 mm, White Alpin
Article number	UDA1010ARA115GV-01
Assembly / Assembly type	Surface-mounted, Corner installation|flush-fitting installation| Installation on a base
Assembly instructions	With MetalRim and an edge height of 15mm, we recommend the use of a composite seal in accordance with ETAG 022 on the floor structure below the shower tray in order to prevent any moisture from penetrating the floor structure., The installation height of the shower tray can be reduced by 30 mm if the Viega outlet fitting art. no. 634 100 is used. Please note: this outlet fitting does not conform to EN 274.
Scope of delivery	1 x square shower tray , 1 x outlet cover in White Alpine (01), for matt colours, outlet cover in matching matt colours.
Length in mm	1000
Width in mm	1000
Height in mm	15
Interior depth	19
Collection	Architectura
Material	Acrylic
Colour name	White Alpin
Other material	Outlet cover: Acrylic
Other surfaces	Outlet cover: glossy
Shape	Square
Colour designation	White Alpin
Other colour designations	Outlet cover: White Alpin
Antibacterial surface (with AntiBac)	No
Easy surface cleaning (CeramicPlus)	No
With slip resistance	Yes

TECHNICAL DRAWINGS

UDA1010ARA115GV-01

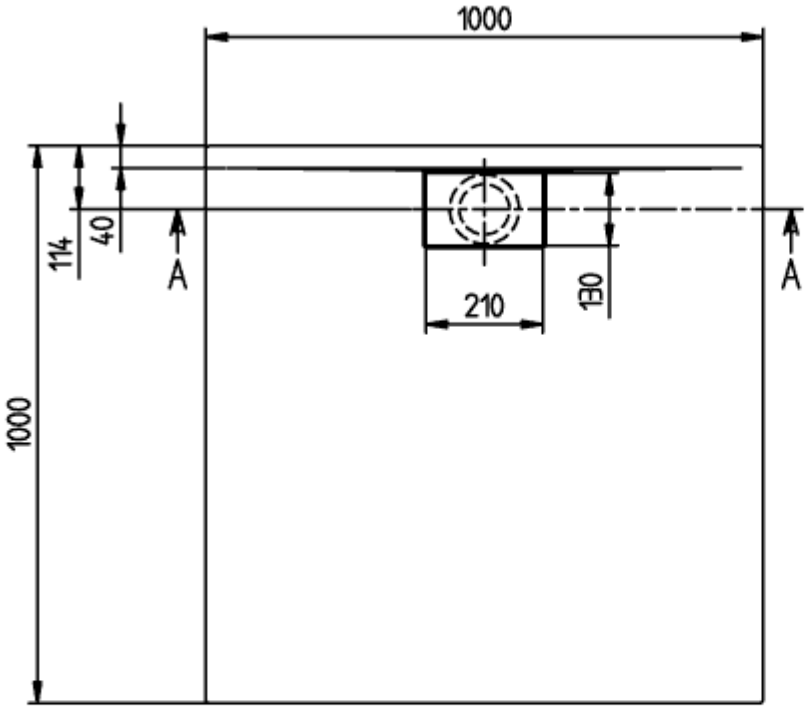

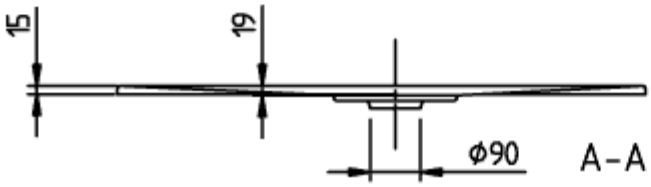

ARCHITECTURA METAL
RIM 1000x1000
UDA1010ARA115

V02 / 31-03-2021

Viller

UDA1010ARA115GV-01

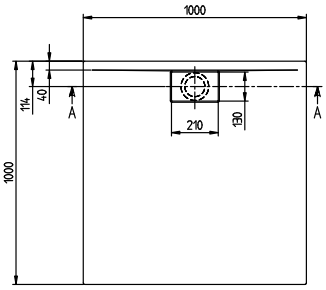

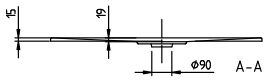

ARCHITECTURA METAL RIM 1000x1000 UDA1010ARA115	Villeroy & Boch 1748
V02 / 31-03-2021	