AVEO OVAL BATH OVAL

PRODUCT INFORMATION

Article title	Villeroy & Boch Aveo Oval bath, 1900 x 950 mm, Stone White
Article number	UBQ194AVE7V-RW
Assembly / Assembly type	built-in installation
Scope of delivery	1 x oval bath , 2 x bath support frame (self-adhesive), adjustable from 130 - 180 mm
Length in mm	1900
Width in mm	950
Height in mm	655
Interior depth	443
Collection	Aveo
Material	Quaryl®
Colour name	Stone White
With overflow	Yes
Number of people	1
Shape	Oval
Colour designation	Stone White
With slip resistance	No
Outlet / outlet	outlet at the foot end
Interior form	oval
SilentFlow	No

TECHNICAL DRAWINGS

UBQ194AVE7V-RW

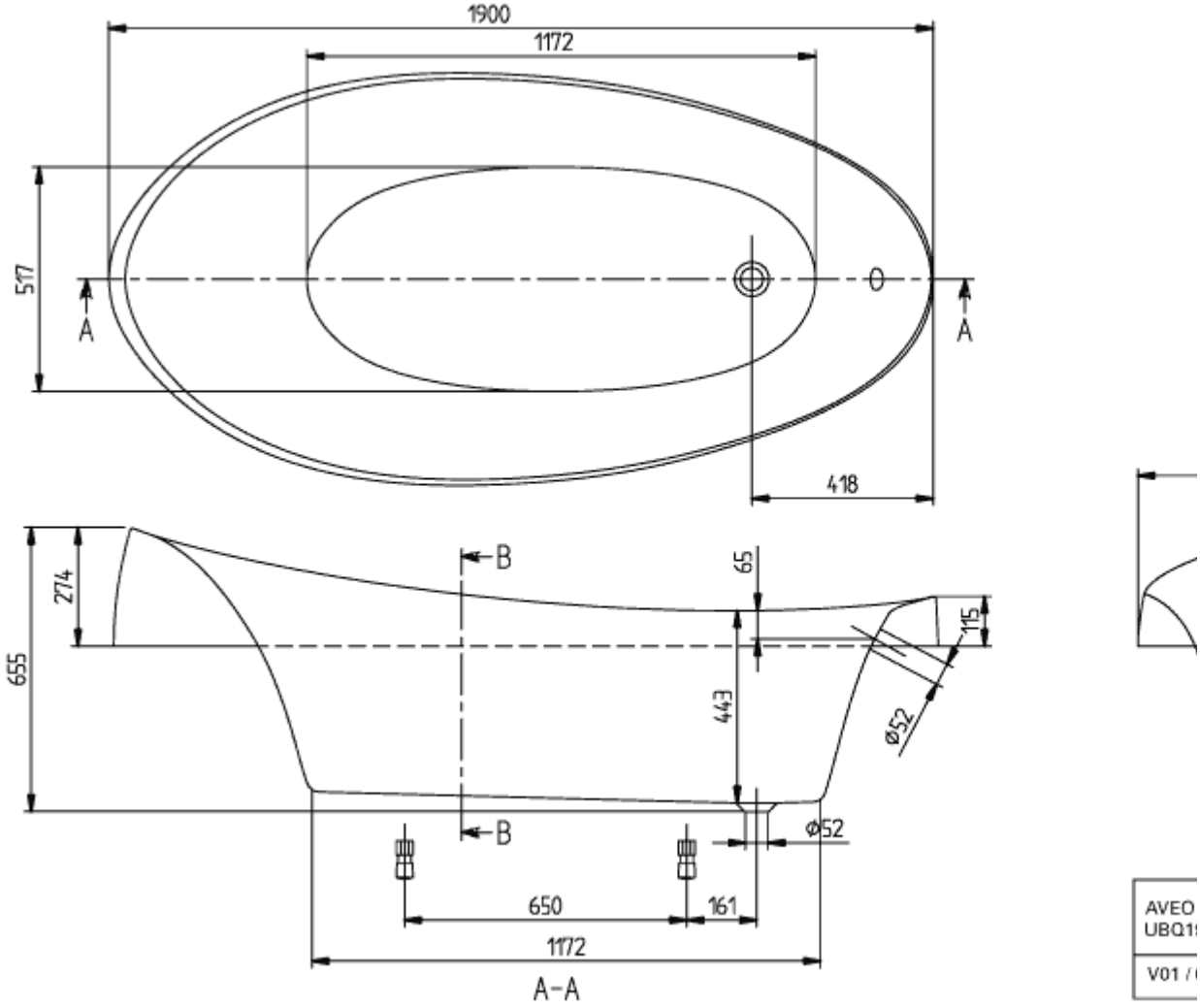
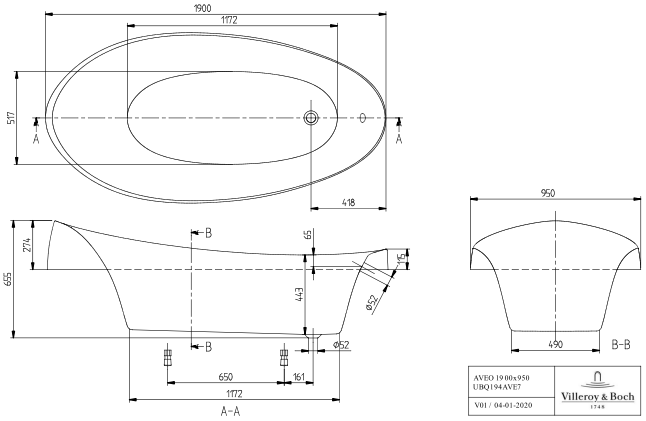
UBQ194AVE7V-RW