# FINION FREE-STANDING BATH FREE-STANDING

## PRODUCT INFORMATION

| | |
|---|---|
| Article title | Villeroy & Boch Finion Free-standing bath, 1700 x 700 mm, White Alpin |
| Article number | UBQ177FIN7N200V201 |
| Assembly / Assembly type | freestanding |
| Scope of delivery | 1 x free-standing bath , 1 x push-to-open valve 1 x overflow |
| Length in mm | 1700 |
| Width in mm | 700 |
| Height in mm | 620 |
| Interior depth | 480 |
| Collection | Finion |
| Material | Quaryl® |
| Colour name | White Alpin |
| Other material | Waste/overflow combination: Plastic Outlet cover: Plastic |
| Other surfaces | Waste/overflow combination: glossy, Outlet cover: glossy |
| With overflow | Yes |
| Number of people | 2 |
| Design Awards | iF Product Design Award 2017 |
| Shape | Free-standing |
| Colour designation | White Alpin |
| Other colour designations | Waste/overflow combination: Champagne, Outlet cover: Champagne |
| With slip resistance | No |
| Outlet / outlet | central outlet |
| Interior form | rectangular |
| SilentFlow | No |

## TECHNICAL DRAWINGS

**UBQ177FIN7N200V201**

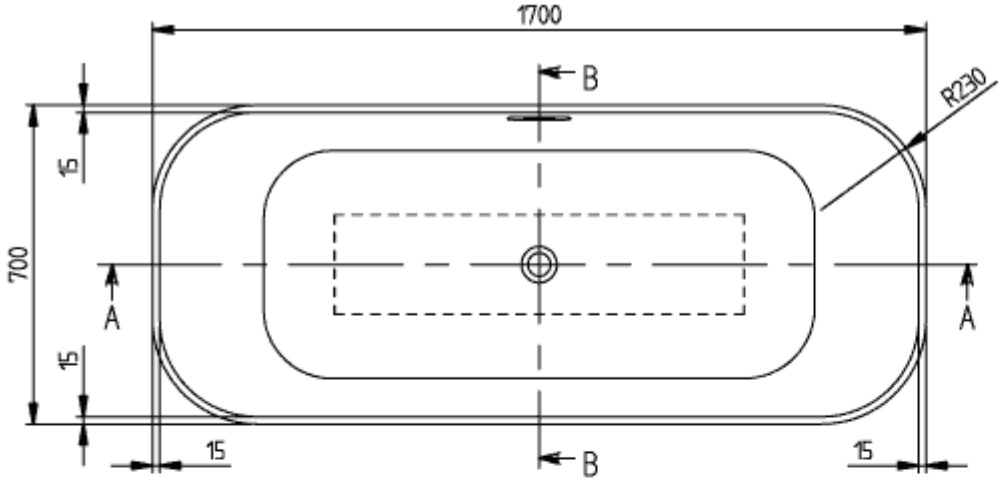


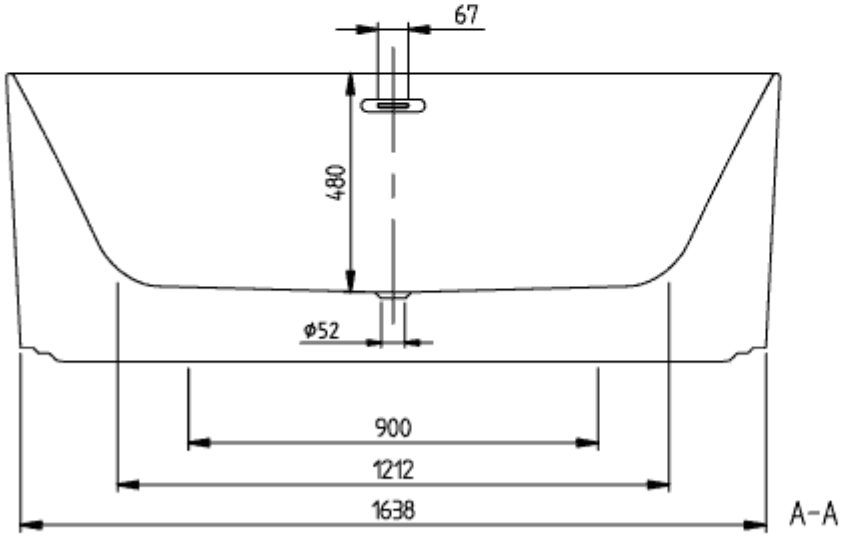


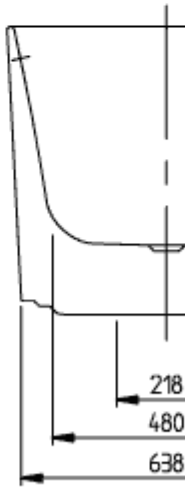


FINION 1700x700
UBQ177FIN7

V02/ 25-02-2020
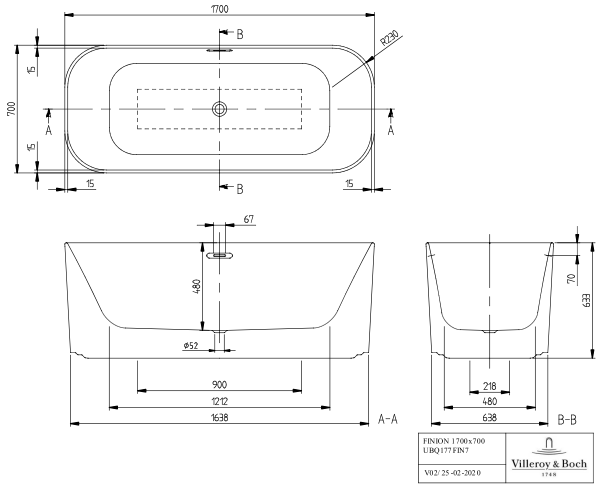
# UBQ177FIN7N200V201