THEANO FREE-STANDING BATH FREE-STANDING

PRODUCT INFORMATION

Article title	Villeroy & Boch Theano Free-standing bath Original Edition, 1550 x 750 mm, Stone White
Article number	UBQ155ANH7F200V-RW
Assembly / Assembly type	freestanding
Scope of delivery	1 x free-standing bath
Length in mm	1550
Width in mm	750
Height in mm	506
Interior depth	480
Collection	Theano
Material	Quaryl®
Colour name	Stone White
With overflow	No
Number of people	1
Shape	Free-standing
Colour designation	Stone White
With slip resistance	No
Outlet / outlet	central outlet
Interior form	oval
SilentFlow	No

TECHNICAL DRAWINGS

UBQ155ANH7F200V-RW

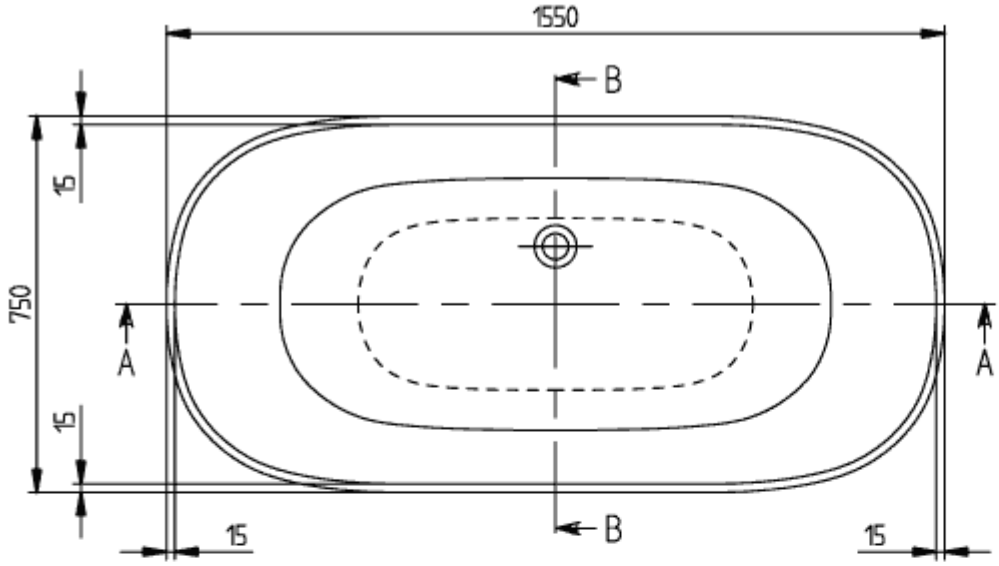

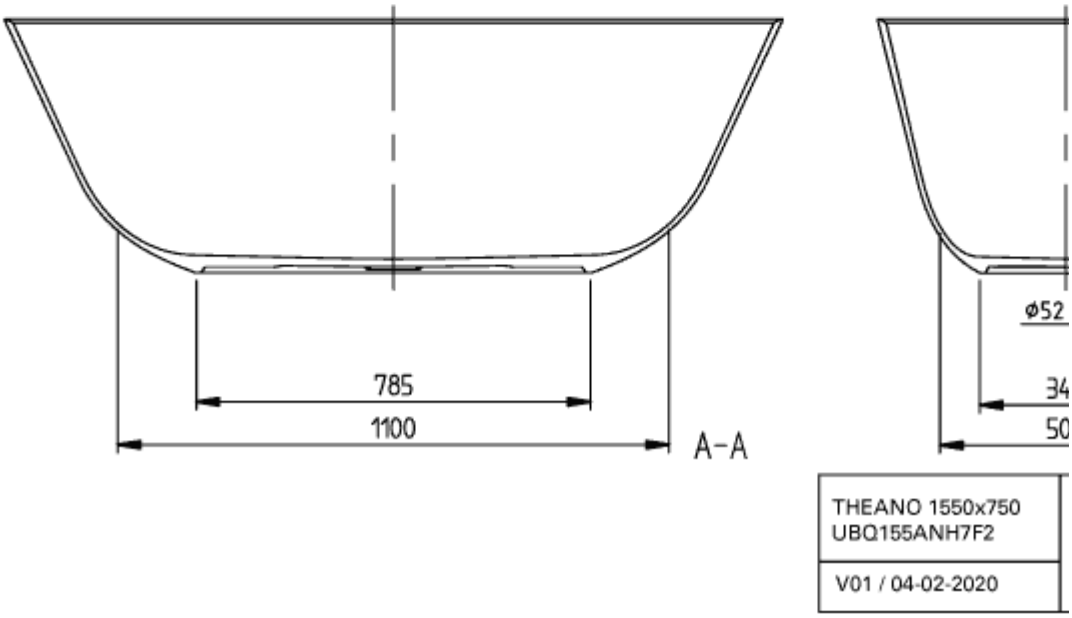
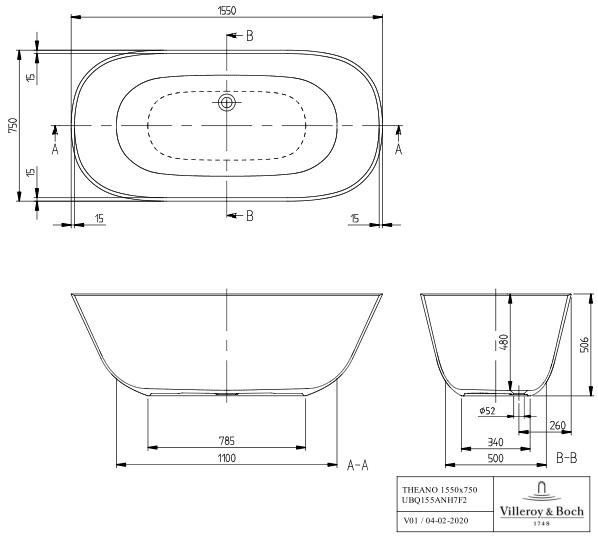
UBQ155ANH7F200V-RW