COLLARO VANITY UNIT ANGULAR

PRODUCT INFORMATION

Article title	Villeroy & Boch Collaro Vanity unit, 4 pull-out compartments, 1600 x 548 x 500 mm, Glossy White / Glossy White
Article number	C02100DH
Assembly / Assembly type	wall-mounted
Type of opening	4 pull-out compartments
Equipment	2 x wide glass drawer divider , 4 x narrow glass drawer divider 2 x accessory box L 4 x pull-out compartment with non-slip mat
Scope of delivery	1 x vanity unit , 1 x fastening set
Position of washbasin	for 2 washbasins
Depth in mm	500
Width in mm	1600
Height in mm	548
Collection	Collaro
Suitable for	selected handwashbasins
Function	with SoftClosing
Material front	MDF
Surface of front	Acrylic film
Material body	MDF
Surface of body	Acrylic film
Material cover panel	MDF
Other material	Handle: aluminium
Other surfaces	Handle: Paint, matt
Shape	Angular
Colour designation	Glossy White
Colour designation of cover panel	Glossy White
Other colour designations	Handle: White Matt
With lighting	No
Smart home compatible	No

TECHNICAL DRAWINGS

C02100DH

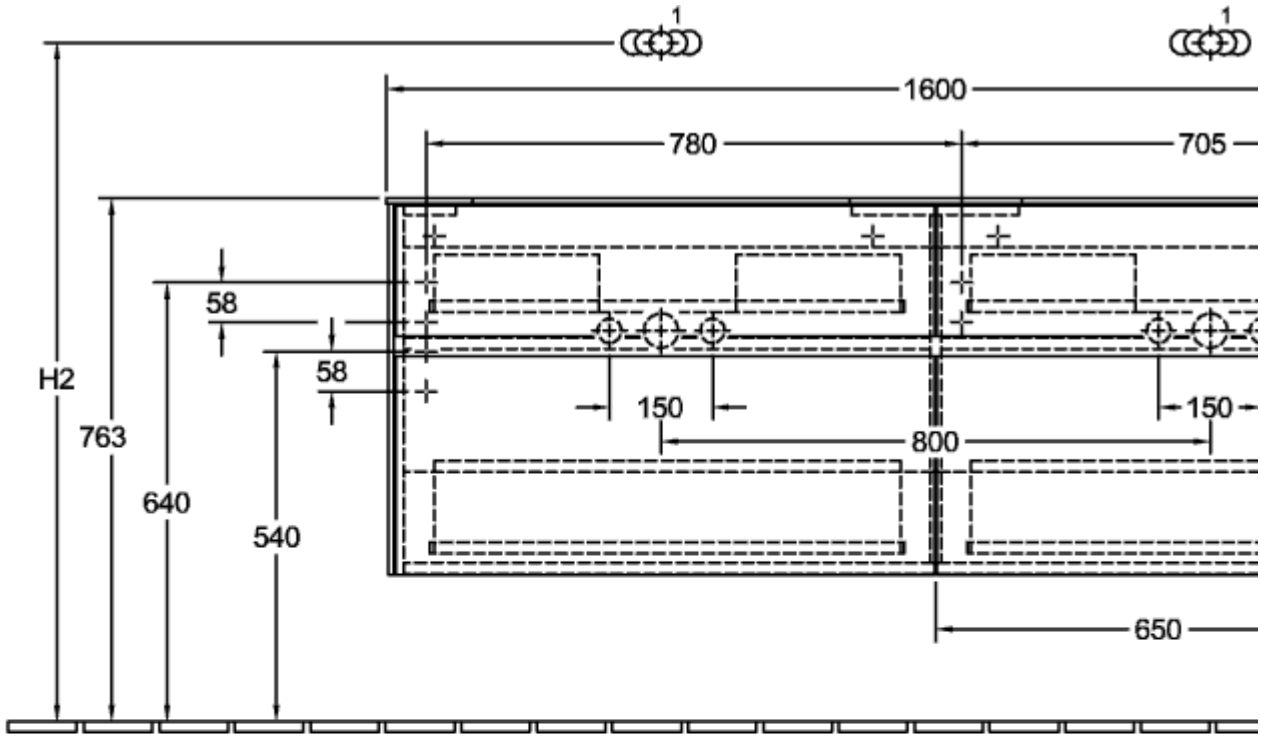

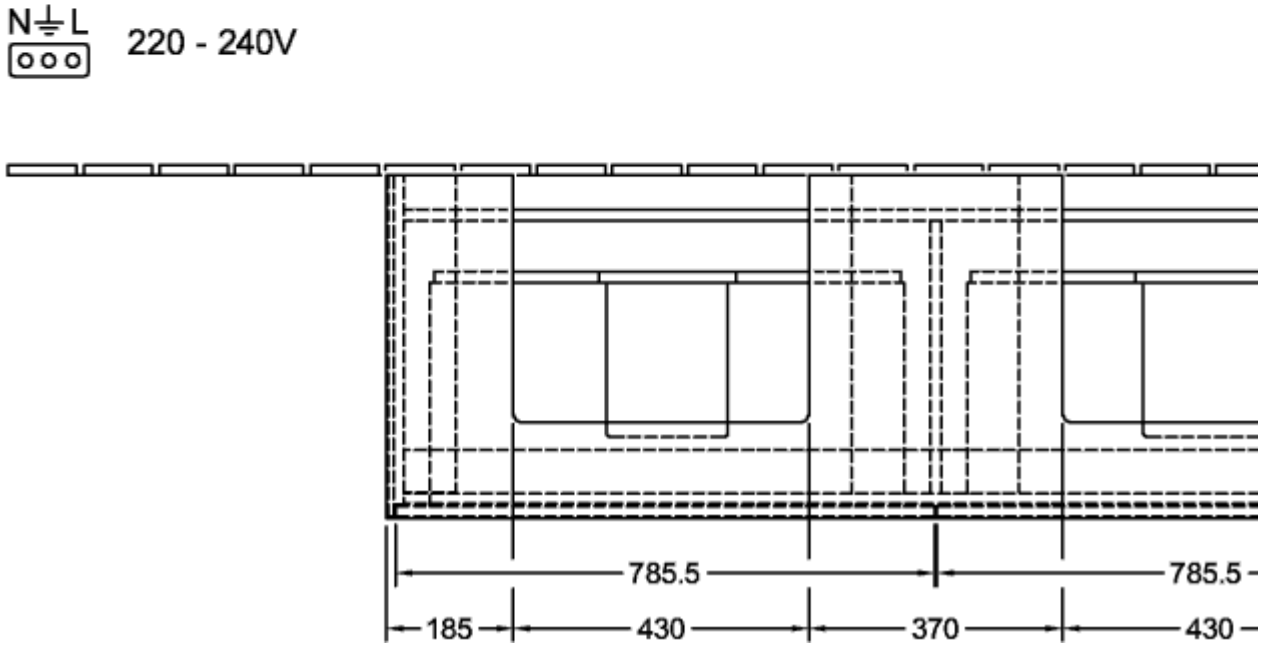

C02100DH

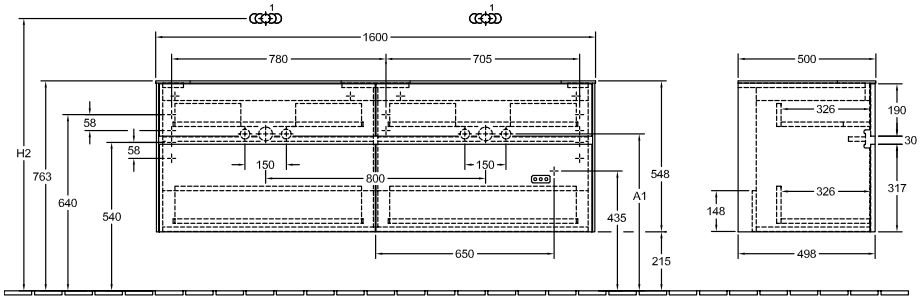

N⏚L 220 - 240V

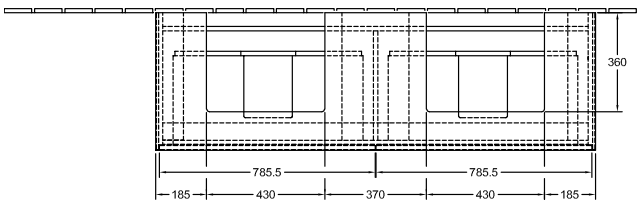

	1	2	H2	A1
4334 5G		X		570
4A22 5G/5L		X		640
4A22 5F	X		1050	640
4A22 6G/6L		X		645
4A22 6F	X		1050	645