SUBWAY 2.0 VANITY UNIT ANGULAR

PRODUCT INFORMATION

Article title	Villeroy & Boch Subway 2.0 Vanity unit, 1 pull-out compartment, 537 x 420 x 423 mm, Black Matt Lacquer
Article number	A68610PD
Assembly / Assembly type	wall-mounted
Type of opening	1 pull-out compartment
Equipment	1 x accessory box L , 1 x pull-out compartment
Scope of delivery	1 x vanity unit , 1 x fastening set
Position of washbasin	washbasin on the middle
Depth in mm	423
Width in mm	537
Height in mm	420
Collection	Subway 2.0
Suitable for	selected washbasins
Function	with SoftClosing
Material front	MDF
Surface of front	Paint
Material body	MDF
Surface of body	Paint
Other material	Handle: Plastic
Other surfaces	Handle: Paint, glossy
Shape	Angular
Colour designation	Black Matt Lacquer
Other colour designations	Handle: glossy chrome-coloured
With lighting	No
Smart home compatible	No

TECHNICAL DRAWINGS

A68610PD

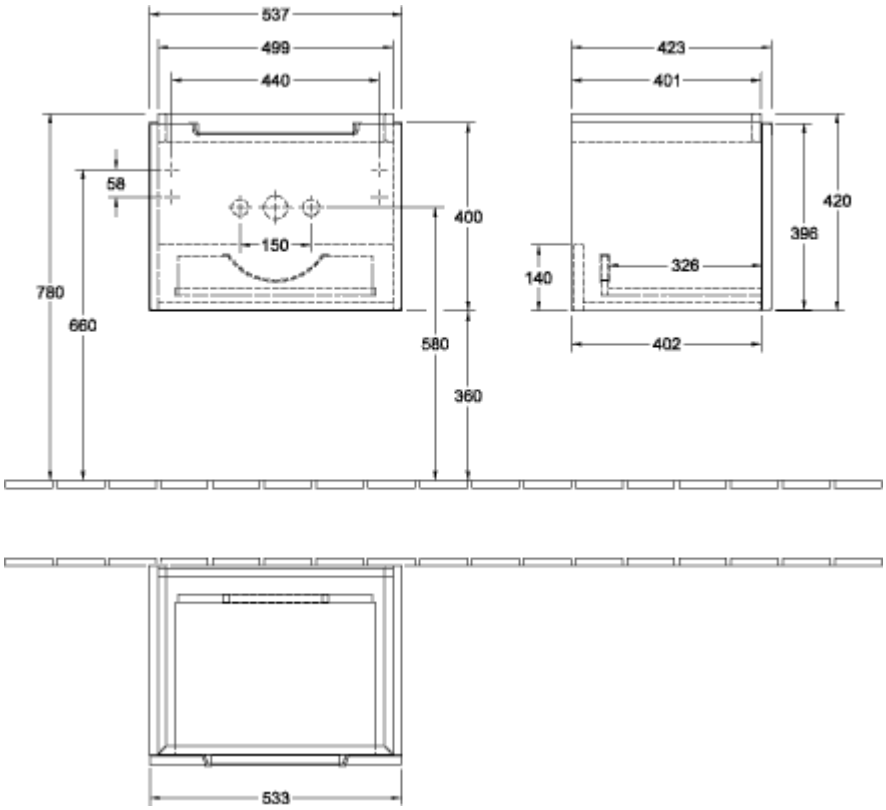

A68610PD

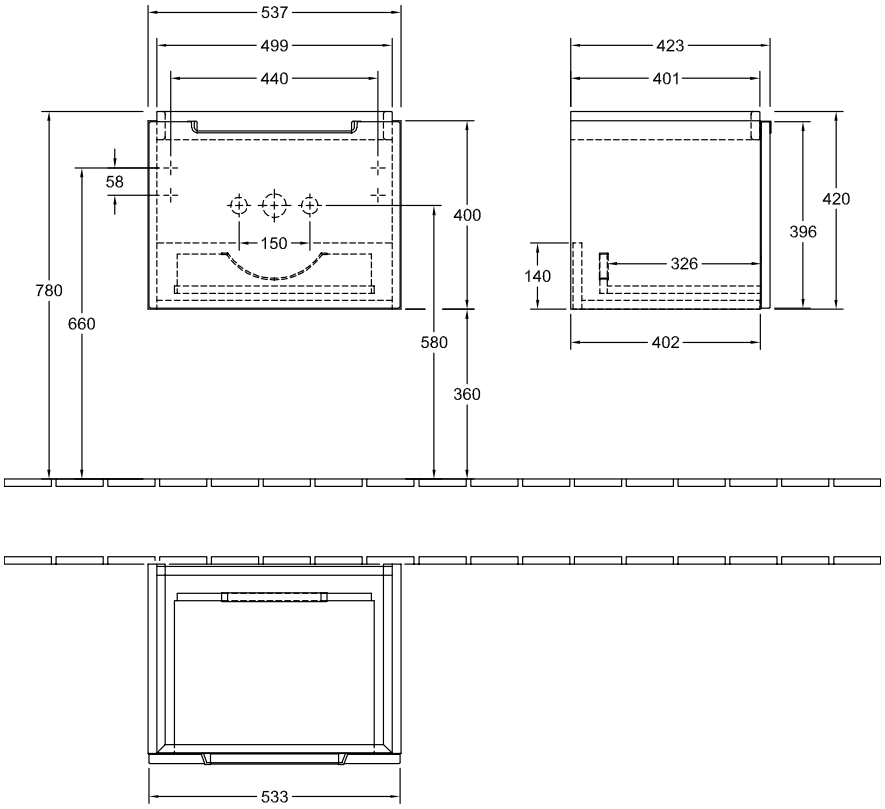
537
499
440
423
401
58
400
150
420
396
326
140
780
660
580
360
402
533