# ACCESSORIES WATER-INLET CONNECTOR

## PRODUCT INFORMATION

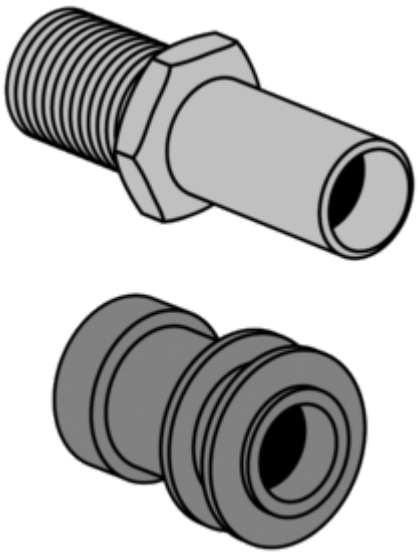

| | |
|---|---|
| Article title | Villeroy & Boch Accessories Water-inlet connector, 76 x 80 x 27,5 mm |
| Article number | 99330000 |
| Scope of delivery | 1 x water-inlet connector |
| Depth in mm | 80 |
| Width in mm | 76 |
| Height in mm | 27,5 |
| Diameter in mm | 35 |
| Collection | Accessories |
| Material | Metal |
| Other material | Seal: Rubber |
| Other surfaces | Seal: matt |