O.NOVO CORNER HANDWASHBASIN COMPACT QUARTER CIRCLE

PRODUCT INFORMATION

Article title	Villeroy & Boch O.novo Corner handwashbasin Compact, 415 x 415 x 195 mm, White Alpin, with overflow, unground
Article number	73274001
Assembly / Assembly type	Corner installation
Scope of delivery	1 x corner handwashbasin
Depth in mm	415
Width in mm	415
Height in mm	195
Interior depth	145
Collection	O.novo
Suitable for	1-hole mixer
Material	Sanitary ceramics
surface	glossy
Colour name	White Alpin
With overflow	Yes
Shape	Quarter circle
Colour designation	White Alpin
Antibacterial surface (with AntiBac)	No
Easy surface cleaning (CeramicPlus)	No
Number of tap holes punched through	1
Underside of washbasin	unground
Number of bowls	1

TECHNICAL DRAWINGS

73274001

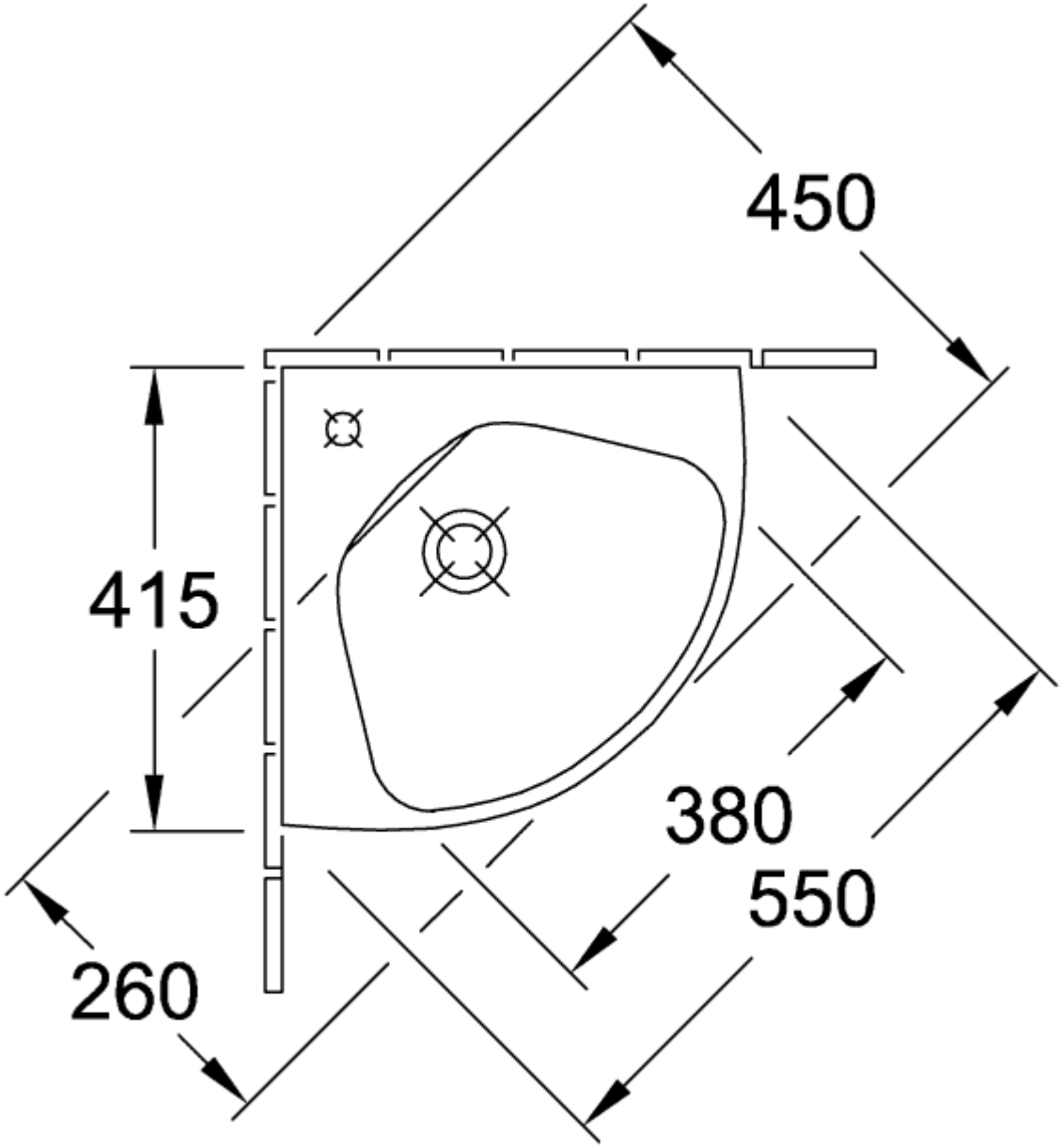
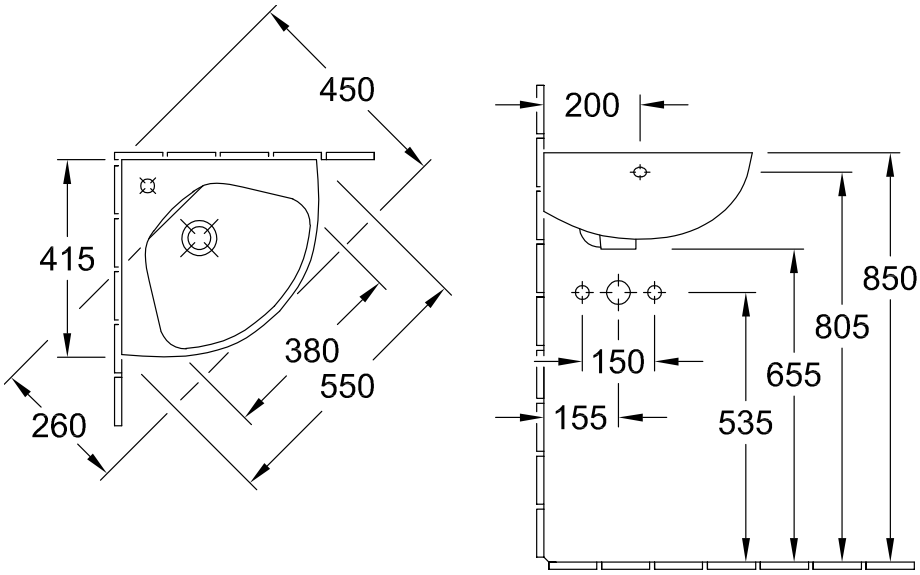
73274001