SUBWAY 2.0 HANDWASHBASIN RECTANGLE

PRODUCT INFORMATION

Article title	Villeroy & Boch Subway 2.0 Handwashbasin, 450 x 370 x 155 mm, White Alpin, with overflow
Article number	7315F501
Assembly / Assembly type	wall-mounted
Assembly instructions	for installation with furniture Subway 2.0
Scope of delivery	1 x handwashbasin
Depth in mm	370
Width in mm	450
Height in mm	155
Interior depth	90
Collection	Subway 2.0
Suitable for	1-hole mixer, Matching Villeroy&Boch furniture
Material	Sanitary ceramics
surface	glossy
Colour name	White Alpin
With overflow	Yes
Shape	Rectangle
Colour designation	White Alpin
Antibacterial surface (with AntiBac)	No
Easy surface cleaning (CeramicPlus)	No
Number of tap holes punched through	1
Number of bowls	1

TECHNICAL DRAWINGS

7315F501

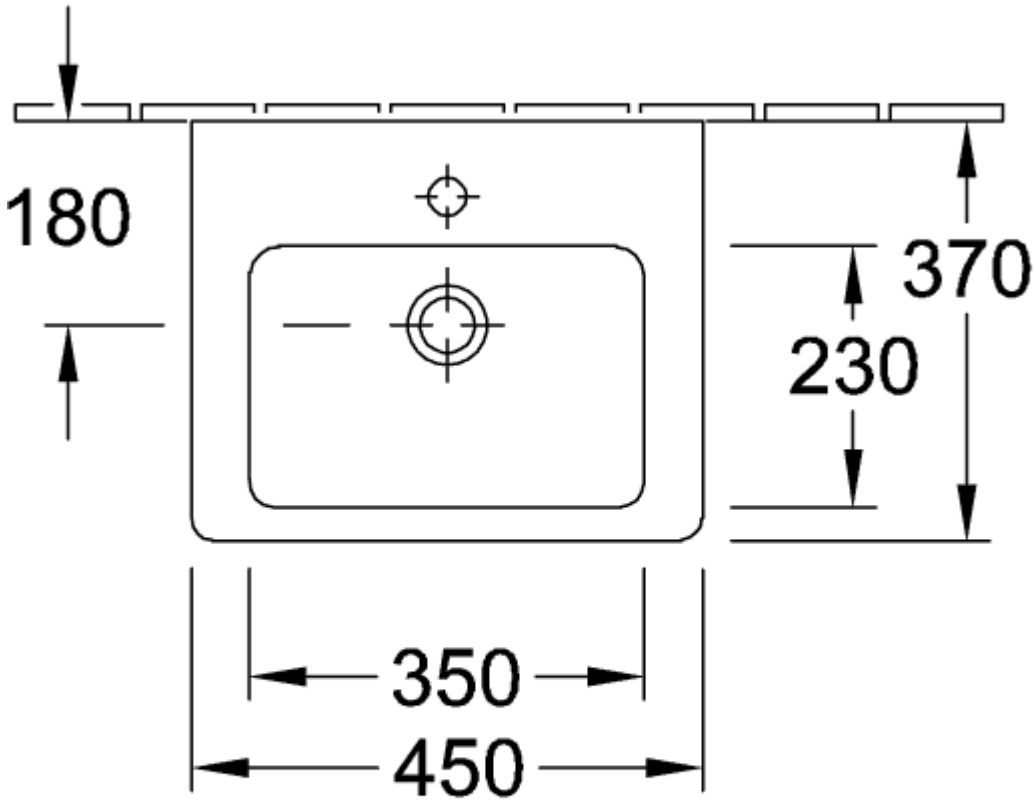
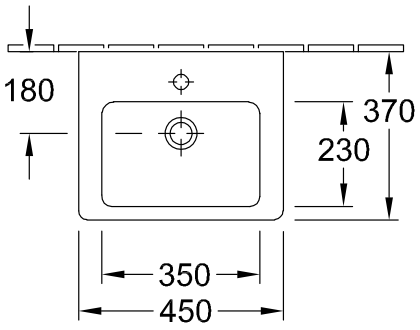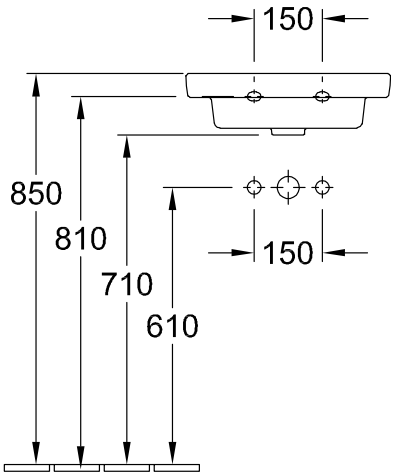
7315F501