SUBWAY WASHDOWN TOILET OVAL

PRODUCT INFORMATION

Article title	Villeroy & Boch Subway Washdown toilet, wall-mounted, White Alpin
Article number	66001001
Assembly / Assembly type	wall-mounted
Scope of delivery	1 x washdown toilet , 1 x fastening set
Depth in mm	565
Width in mm	375
Height in mm	360
Collection	Subway
Suitable for	Concealed cistern
Innovative flushing technology (with TwistFlush)	No
Flush volume l	3 / 6 l
Wall-mounted - floor-standing	wall-mounted
Material	Sanitary ceramics
surface	glossy
Colour name	White Alpin
Shape	Oval
Colour designation	White Alpin
Antibacterial surface (with AntiBac)	No
Easy surface cleaning (CeramicPlus)	No
Rimless (mit DirectFlush)	No
Flush type	Washdown toilet
Integrated freshness solution (with ViFresh)	No
Outlet / outlet	horizontal outlet

TECHNICAL DRAWINGS

66001001

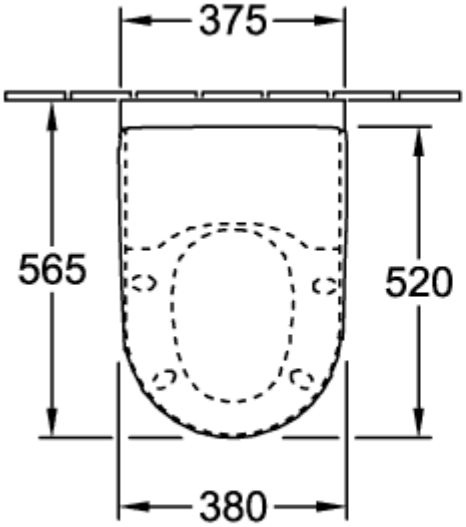

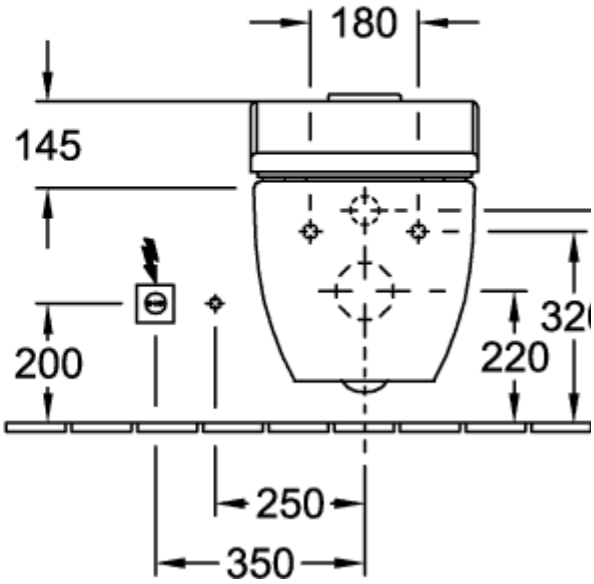

66001001

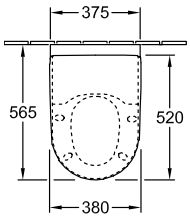

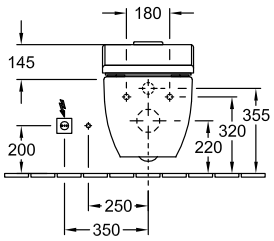

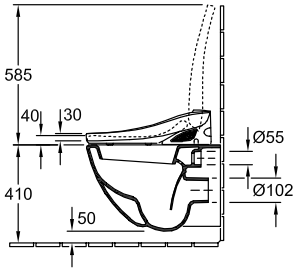

66001001

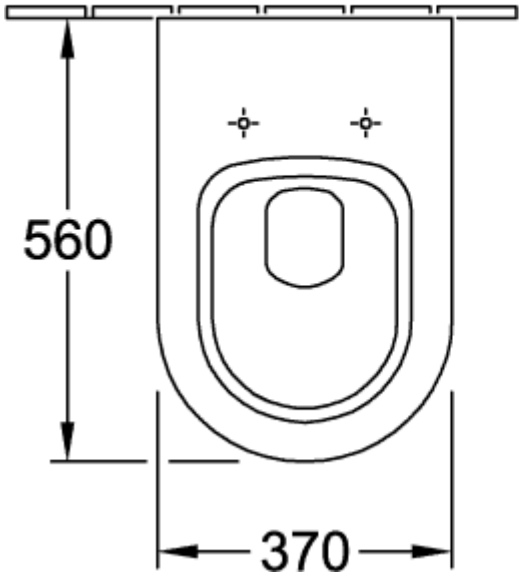

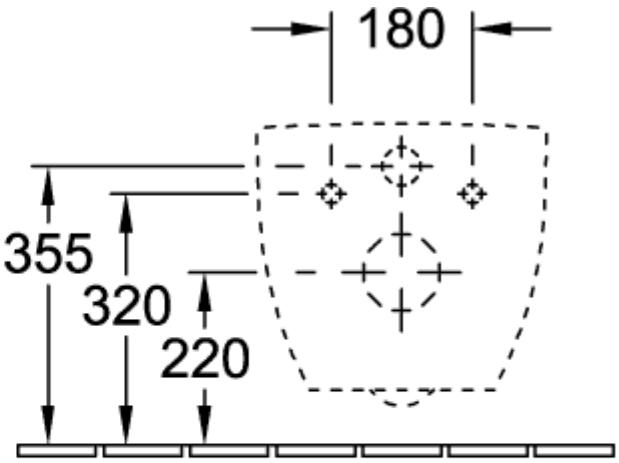
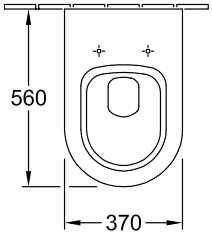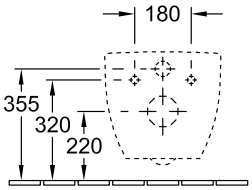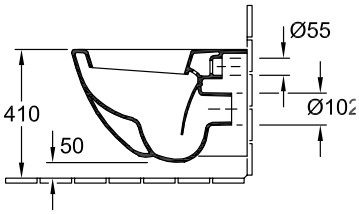
66001001