O.NOVO DOUBLE SINK RECTANGLE

PRODUCT INFORMATION

Article title	Villeroy & Boch O.novo Double sink, 510 x 795 x 220 mm, White Alpin, with overflow
Article number	63310001
Assembly / Assembly type	wall-mounted
Assembly instructions	fastening with mounting-brackets, fastening with profile iron
Scope of delivery	1 x sink
Depth in mm	795
Width in mm	510
Height in mm	220
Interior depth	200
Collection	O.novo
Material	Sanitary ceramics
surface	glossy
Colour name	White Alpin
With overflow	Yes
Shape	Rectangle
Colour designation	White Alpin
Antibacterial surface (with AntiBac)	No
Easy surface cleaning (CeramicPlus)	No
Number of bowls	2

TECHNICAL DRAWINGS

63310001

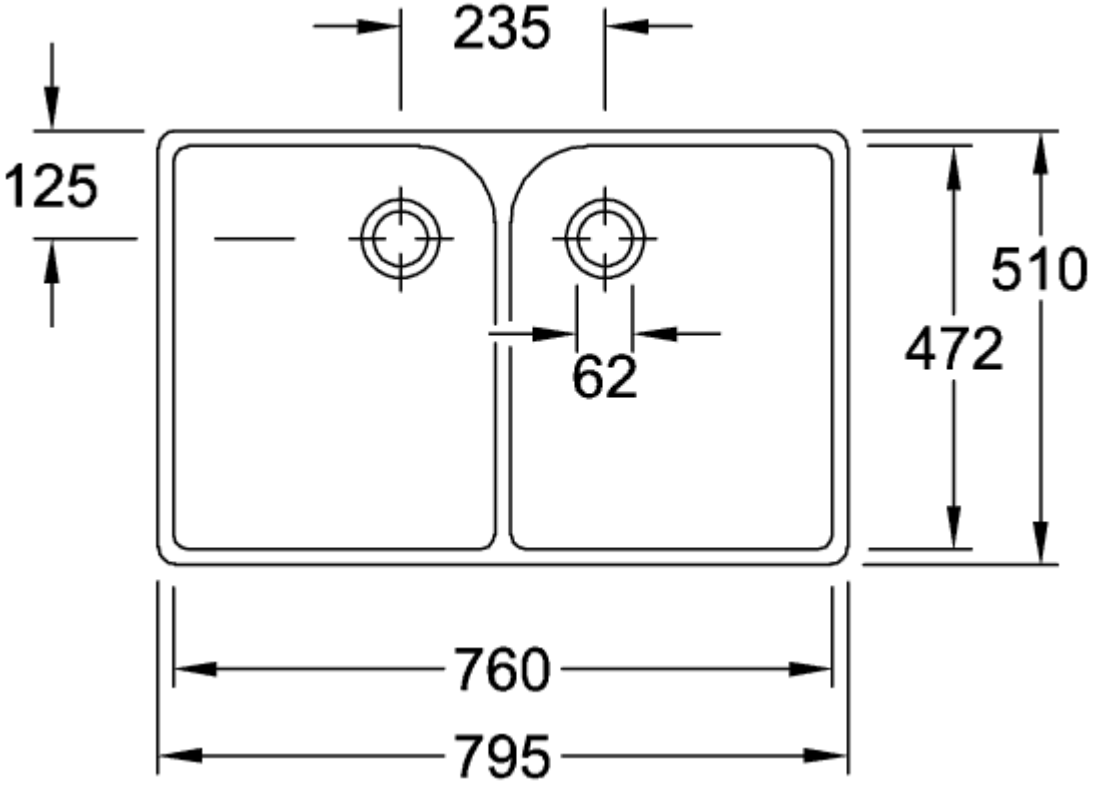

63310001

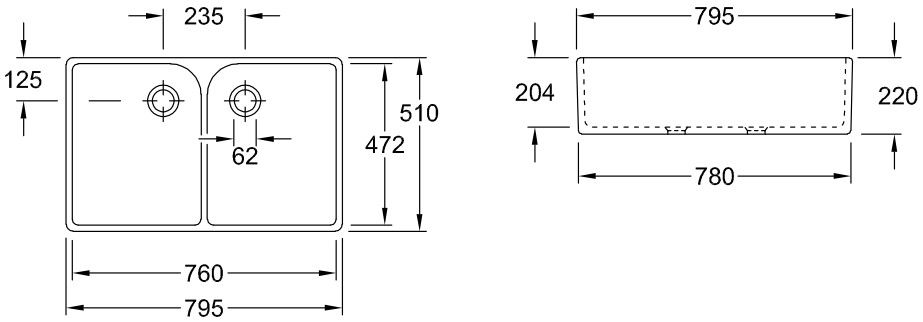

63310001

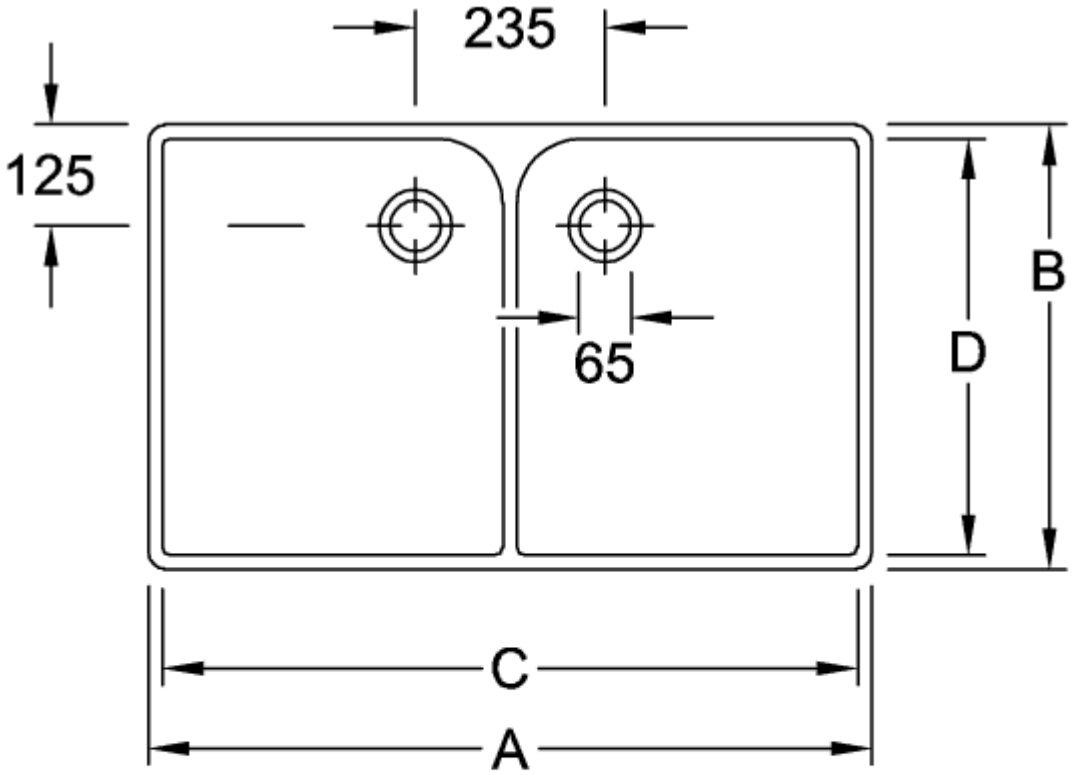

	A	B	C	D	E
6331 00	795	510	760	465	785
6332 00	895	550	860	515	885

63310001

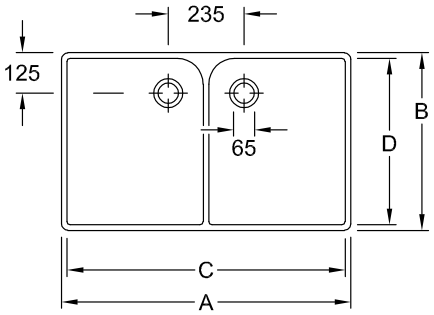

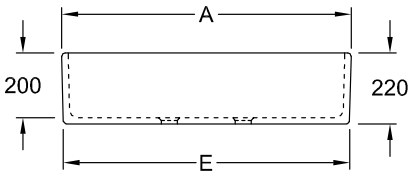

	A	B	C	D	E
6331 00	795	510	760	465	785
6332 00	895	550	860	515	885