# LOOP & FRIENDS UNDERCOUNTER WASHBASIN RECTANGLE

## PRODUCT INFORMATION

| | |
|---|---|
| Article title | Villeroy & Boch Loop & Friends Undercounter washbasin, 540 x 340 x 185 mm, White Alpin, with overflow |
| Article number | 61630001 |
| Assembly / Assembly type | Undercounter |
| Assembly instructions | the hole for the washbasin can only be cut out using the original washbasin because tolerances of several millimetres are possible, installation possible in natural stone and laminate countertops |
| Scope of delivery | 1 x undercounter washbasin , 1 x extended ball rod to operate pop-up outlet valve 1 x fastening set |
| Depth in mm | 340 |
| Width in mm | 540 |
| Height in mm | 185 |
| Interior depth | 135 |
| Collection | Loop & Friends |
| Material | Sanitary ceramics |
| surface | glossy |
| Colour name | White Alpin |
| With overflow | Yes |
| Shape | Rectangle |
| Colour designation | White Alpin |
| Antibacterial surface (with AntiBac) | No |
| Easy surface cleaning (CeramicPlus) | No |
| Number of bowls | 1 |

## TECHNICAL DRAWINGS

**61630001**

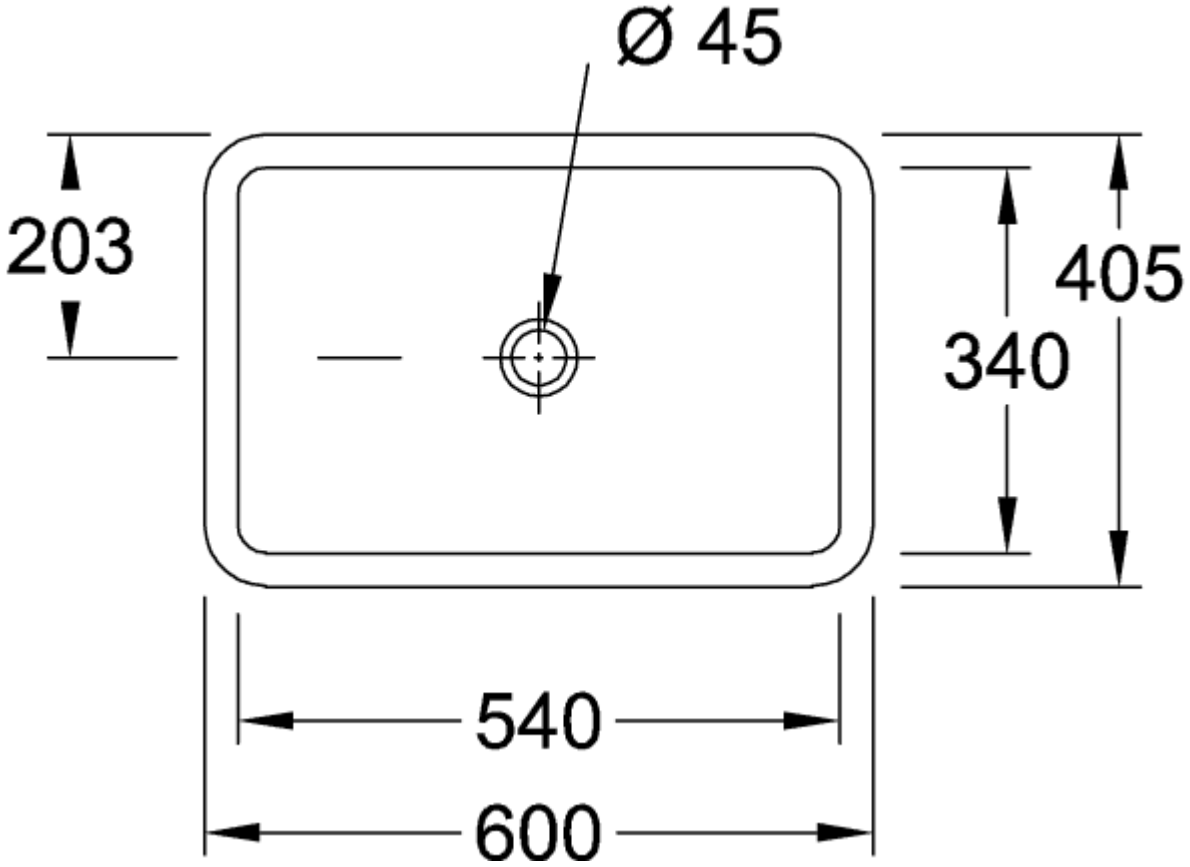


**61630001**

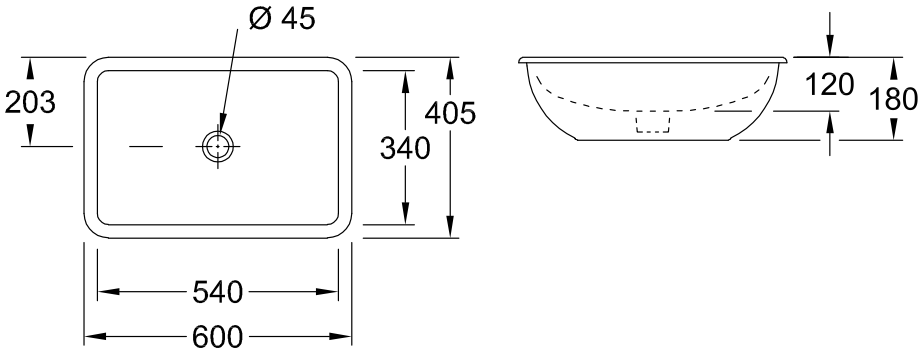

**61630001**

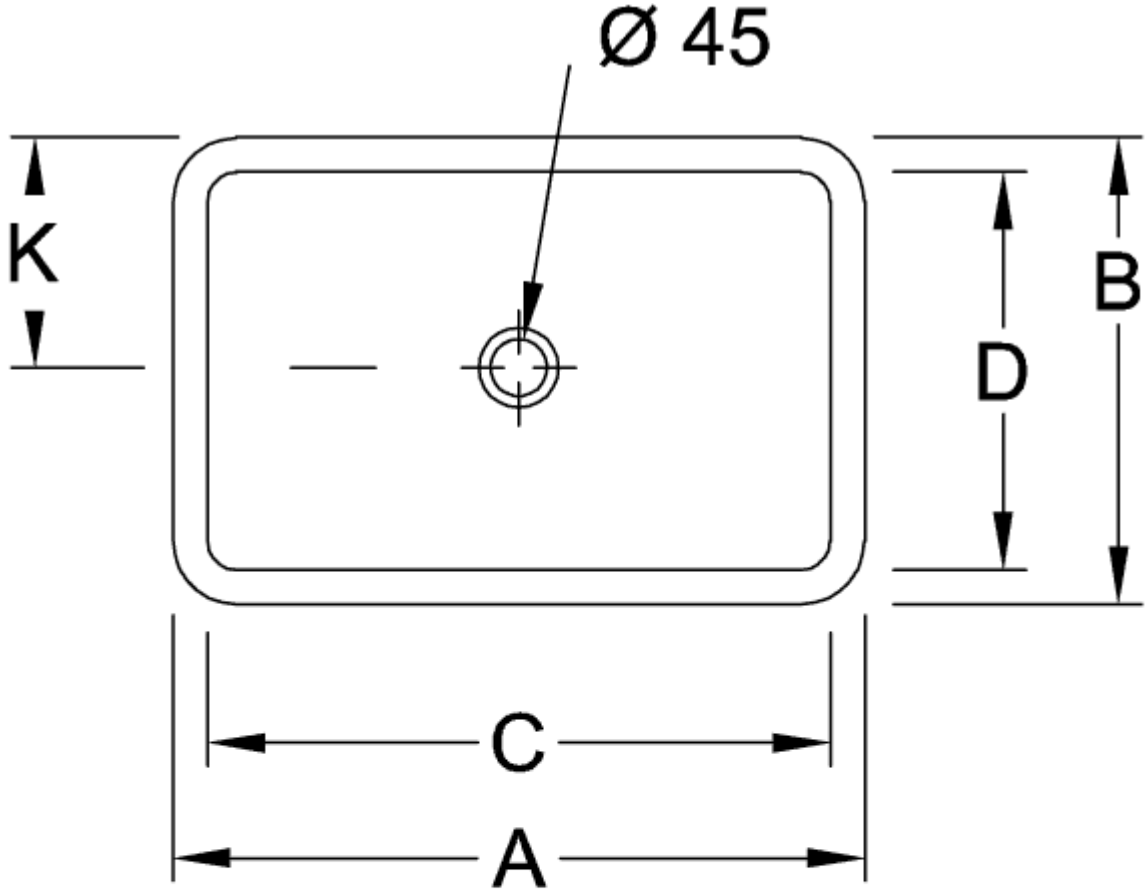


| | A | B | C | D | K | M | N |
|---|---|---|---|---|---|---|---|
| 6163 10 | 510 | 340 | 450 | 280 | 170 | 160 | 115 |
| 6163 11 | 510 | 340 | 450 | 280 | 170 | 160 | 115 |
| 6163 00 | 600 | 405 | 540 | 340 | 203 | 180 | 120 |
| 6163 01 | 600 | 405 | 540 | 340 | 203 | 180 | 120 |
| 6163 20 | 675 | 450 | 615 | 380 | 225 | 180 | 140 |
| 6163 21 | 675 | 450 | 615 | 380 | 225 | 180 | 140 |

**61630001**

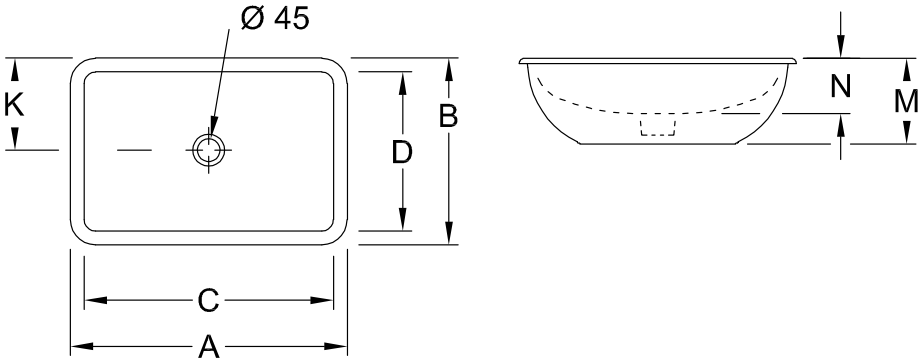


| | A | B | C | D | K | M | N |
|---|---|---|---|---|---|---|---|
| 6163 10 | 510 | 340 | 450 | 280 | 170 | 160 | 115 |
| 6163 11 | 510 | 340 | 450 | 280 | 170 | 160 | 115 |
| 6163 00 | 600 | 405 | 540 | 340 | 203 | 180 | 120 |
| 6163 01 | 600 | 405 | 540 | 340 | 203 | 180 | 120 |
| 6163 20 | 675 | 450 | 615 | 380 | 225 | 180 | 140 |
| 6163 21 | 675 | 450 | 615 | 380 | 225 | 180 | 140 |