# LOOP & FRIENDS BUILT-IN WASHBASIN OVAL

## PRODUCT INFORMATION

| | |
|---|---|
| Article title | Villeroy & Boch Loop & Friends Built-in washbasin, 660 x 470 x 230 mm, White Alpin, with overflow, unground |
| Article number | 61553001 |
| Assembly / Assembly type | built-in installation |
| Scope of delivery | 1 x built-in washbasin , 1 x extended ball rod to operate pop-up outlet valve 1 x cut-out template |
| Depth in mm | 470 |
| Width in mm | 660 |
| Height in mm | 230 |
| Interior depth | 180 |
| Collection | Loop & Friends |
| Material | Sanitary ceramics |
| surface | glossy |
| Colour name | White Alpin |
| With overflow | Yes |
| Shape | Oval |
| Colour designation | White Alpin |
| Antibacterial surface (with AntiBac) | No |
| Easy surface cleaning (CeramicPlus) | No |
| Underside of washbasin | unground |
| Number of bowls | 1 |

## TECHNICAL DRAWINGS

**61553001**

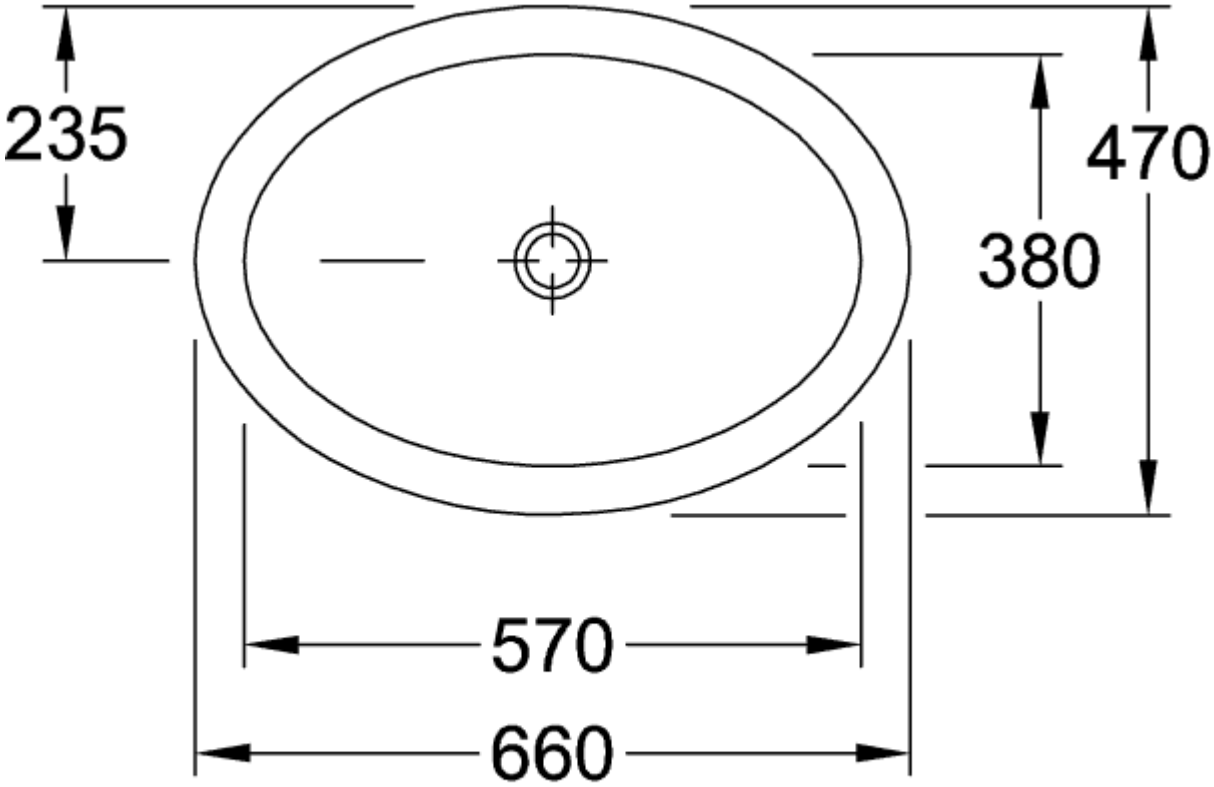


**61553001**

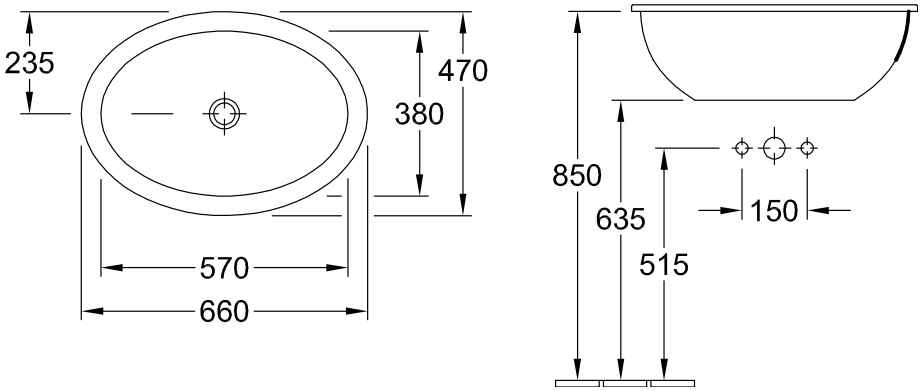

**61553001**

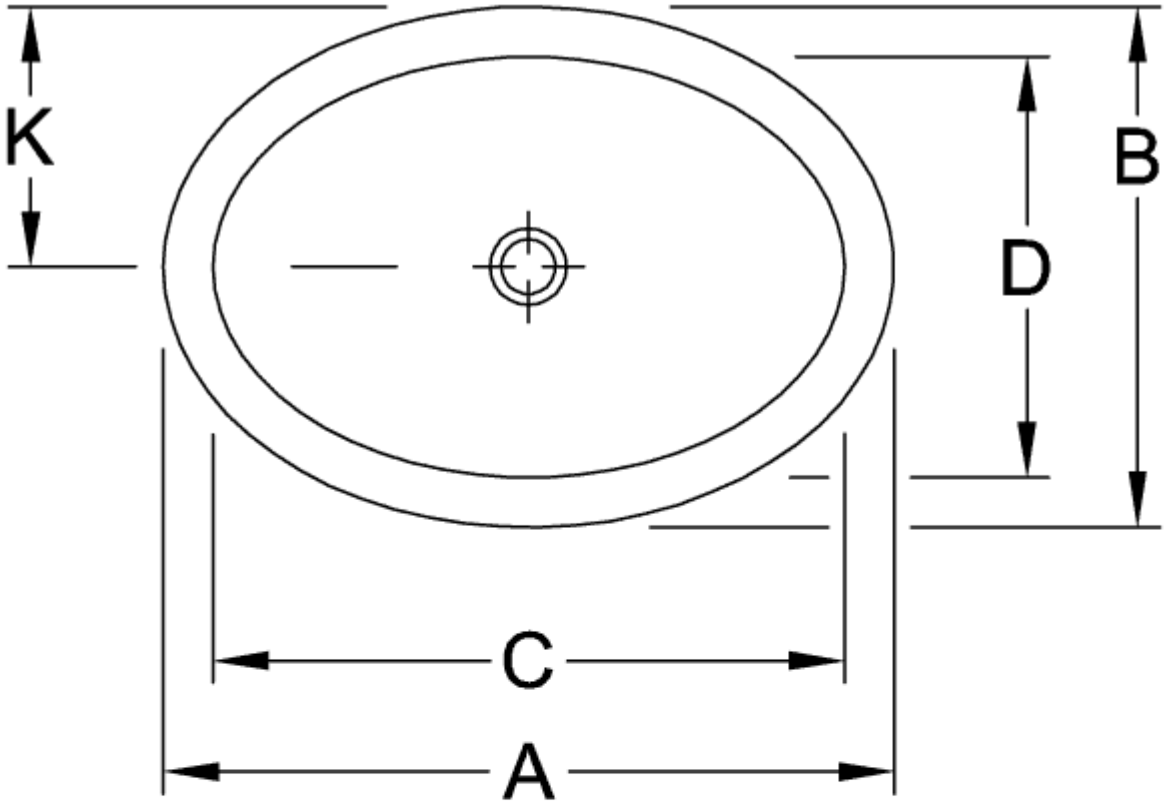


| | A | B | C | D | G | K | R |
|---|---|---|---|---|---|---|---|
| 6155 30 | 660 | 470 | 570 | 380 | 635 | 235 | 515 |
| 6155 31 | 660 | 470 | 570 | 380 | 635 | 235 | 515 |
| 6155 20 | 570 | 410 | 485 | 325 | 650 | 205 | 530 |
| 6155 21 | 570 | 410 | 485 | 325 | 650 | 205 | 530 |
| 6155 10 | 505 | 360 | 430 | 285 | 680 | 180 | 560 |
| 6155 11 | 505 | 360 | 430 | 285 | 680 | 180 | 560 |
| 6155 00 | 450 | 320 | 385 | 255 | 700 | 160 | 580 |
| 6155 01 | 450 | 320 | 385 | 255 | 700 | 160 | 580 |

## 61553001

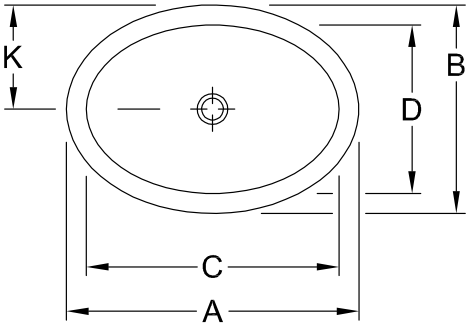


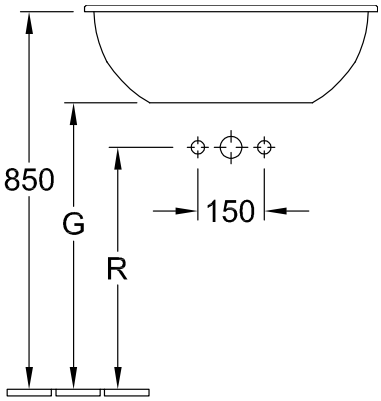


| | A | B | C | D | G | K | R |
|---|---|---|---|---|---|---|---|
| 6155 30 | 660 | 470 | 570 | 380 | 635 | 235 | 515 |
| 6155 31 | 660 | 470 | 570 | 380 | 635 | 235 | 515 |
| 6155 20 | 570 | 410 | 485 | 325 | 650 | 205 | 530 |
| 6155 21 | 570 | 410 | 485 | 325 | 650 | 205 | 530 |
| 6155 10 | 505 | 360 | 430 | 285 | 680 | 180 | 560 |
| 6155 11 | 505 | 360 | 430 | 285 | 680 | 180 | 560 |
| 6155 00 | 450 | 320 | 385 | 255 | 700 | 160 | 580 |
| 6155 01 | 450 | 320 | 385 | 255 | 700 | 160 | 580 |