O.NOVO WASHDOWN TOILET OVAL

PRODUCT INFORMATION

Article title	Villeroy & Boch O.novo Washdown toilet, floor-standing, White Alpin
Article number	56571001
Assembly / Assembly type	floor-standing
Scope of delivery	1 x washdown toilet , 1 x fastening set
Depth in mm	560
Width in mm	360
Height in mm	400
Collection	O.novo
Suitable for	Concealed cistern
Innovative flushing technology (with TwistFlush)	No
Flush volume l	3 / 4,5 l
Wall-mounted - floor-standing	floor-standing
Material	Sanitary ceramics
surface	glossy
Colour name	White Alpin
Shape	Oval
Colour designation	White Alpin
Antibacterial surface (with AntiBac)	No
Easy surface cleaning (CeramicPlus)	No
Rimless (mit DirectFlush)	No
Flush type	Washdown toilet
Integrated freshness solution (with ViFresh)	No
Outlet / outlet	horizontal outlet

TECHNICAL DRAWINGS

56571001

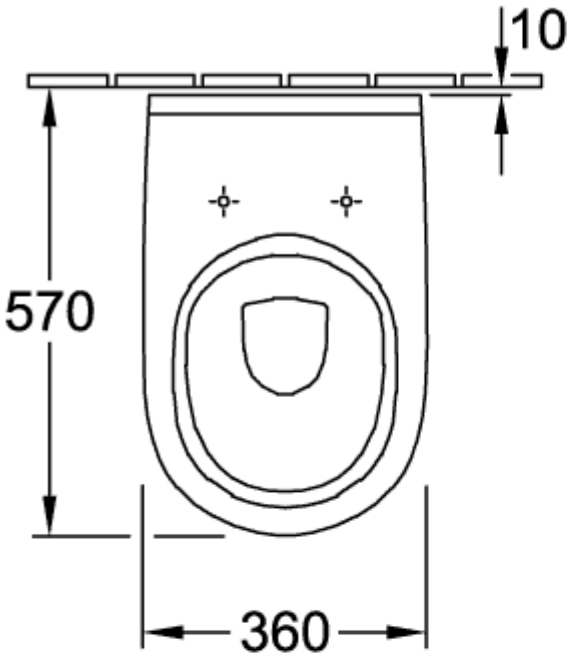

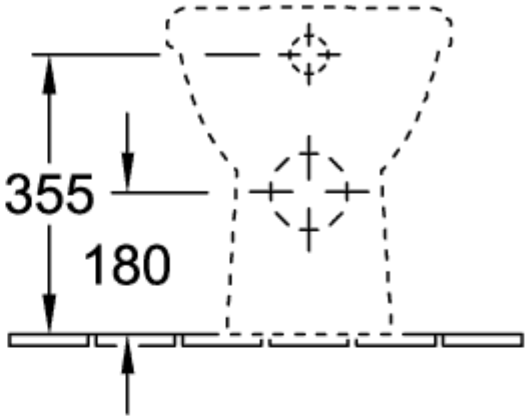

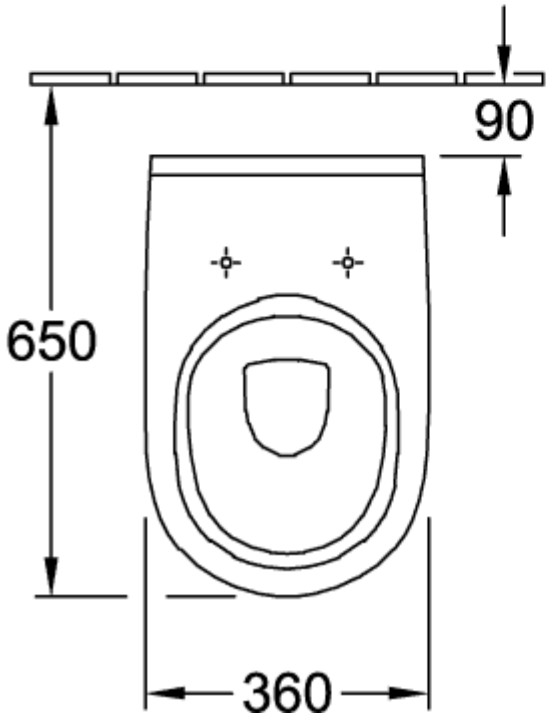

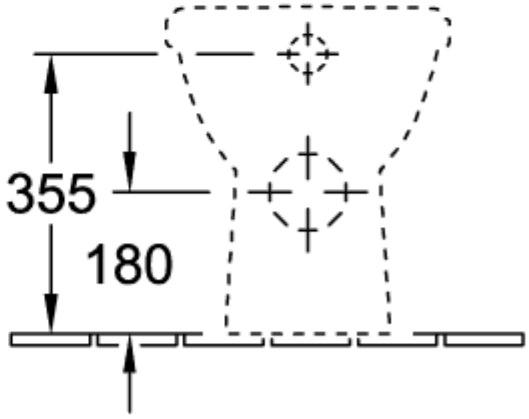

56571001

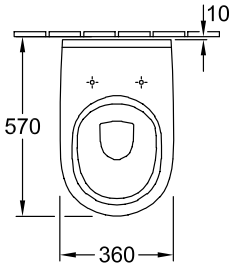
10
570
360

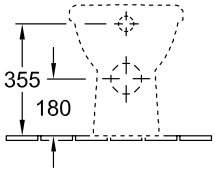
355
180

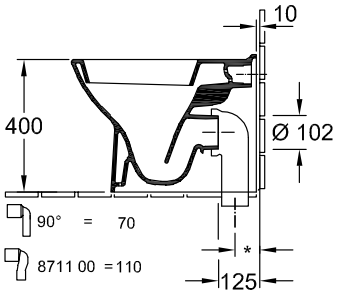
10
400
Ø 102
90° = 70
8711 00 = 110
*
125

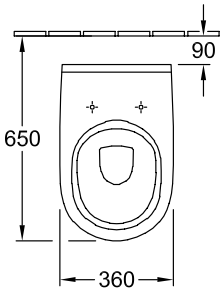
90
650
360

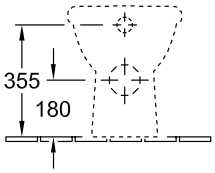
355
180

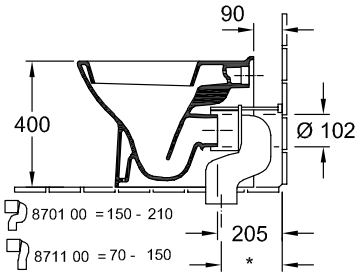
90
400
Ø 102
8701 00 = 150 - 210
8711 00 = 70 - 150
205
*