SUBWAY 2.0 WASHDOWN TOILET, RIMLESS OVAL

PRODUCT INFORMATION

Article title	Villeroy & Boch Subway 2.0 Washdown toilet, rimless, wall-mounted, with AntiBac, White Alpin AntiBac CeramicPlus
Article number	5614R0T2
Assembly / Assembly type	wall-mounted
Assembly instructions	not suitable for installation with flush valves
Scope of delivery	1 x washdown toilet, rimless , 1 x fastening set
Depth in mm	560
Width in mm	370
Height in mm	365
Collection	Subway 2.0
Suitable for	Concealed cistern
Innovative flushing technology (with TwistFlush)	No
Flush volume l	3 / 4,5 l
Wall-mounted - floor-standing	wall-mounted
Material	Sanitary ceramics
surface	glossy
Colour name	White Alpin AntiBac CeramicPlus
Design Awards	Universal Design Consumer Favorite 2014
Shape	Oval
Colour designation	White Alpin
Antibacterial surface (with AntiBac)	Yes
Easy surface cleaning (CeramicPlus)	Yes
Rimless (mit DirectFlush)	Yes
Flush type	Washdown toilet
Integrated freshness solution (with ViFresh)	No
Outlet / outlet	horizontal outlet

TECHNICAL DRAWINGS

5614R0T2

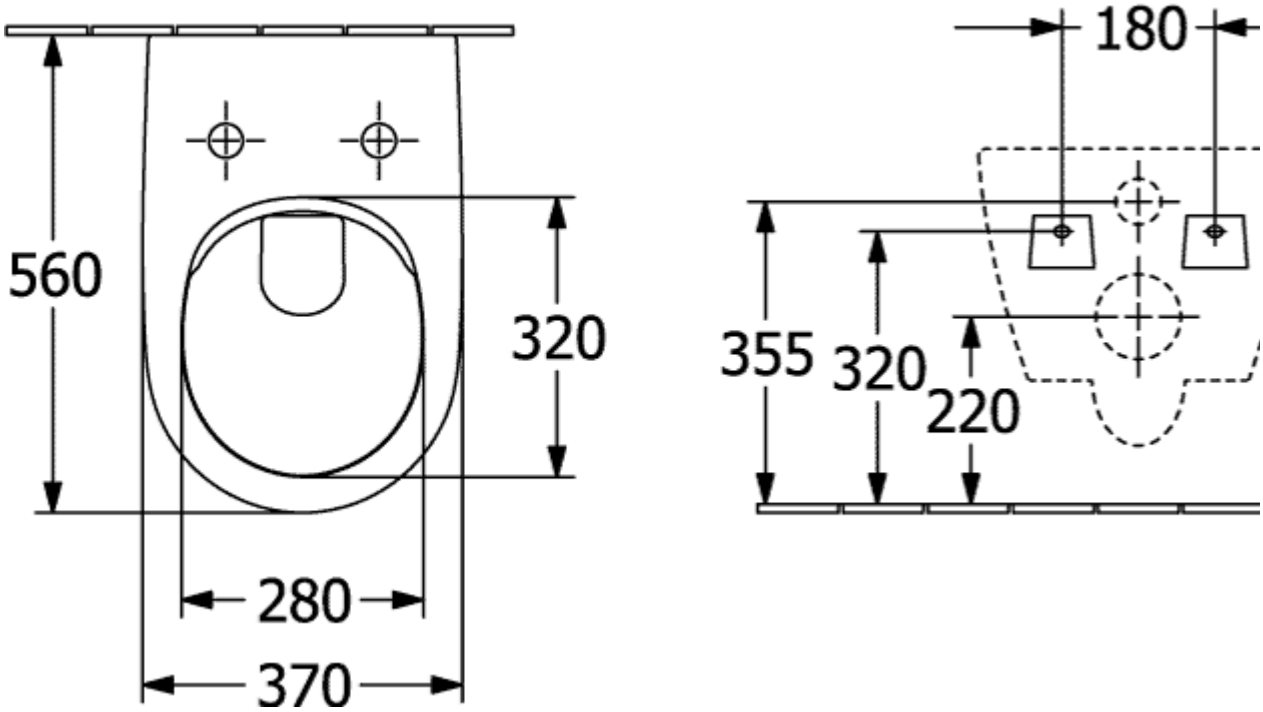
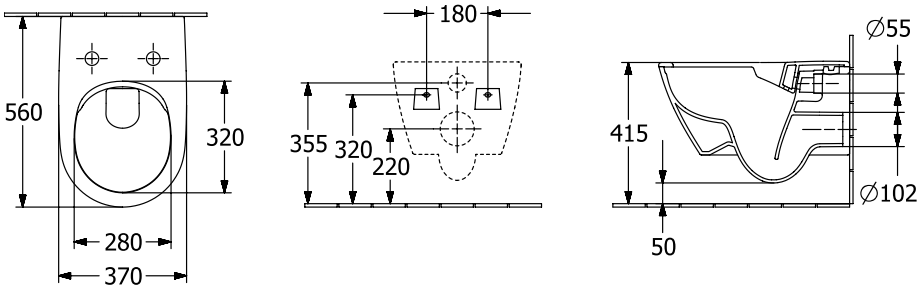
5614R0T2