O.NOVO BIDET OVAL

PRODUCT INFORMATION

Article title	Villeroy & Boch O.novo Bidet, wall-mounted, 360 x 560 mm, White Alpin
Article number	54600001
Assembly / Assembly type	wall-mounted
Scope of delivery	1 x bidet
Depth in mm	560
Width in mm	360
Height in mm	320
Collection	O.novo
Suitable for	1-hole mixer
Wall-mounted - floor-standing	wall-mounted
Material	Sanitary ceramics
surface	glossy
Colour name	White Alpin
Shape	Oval
Colour designation	White Alpin
Antibacterial surface (with AntiBac)	No
Easy surface cleaning (CeramicPlus)	No

TECHNICAL DRAWINGS

54600001

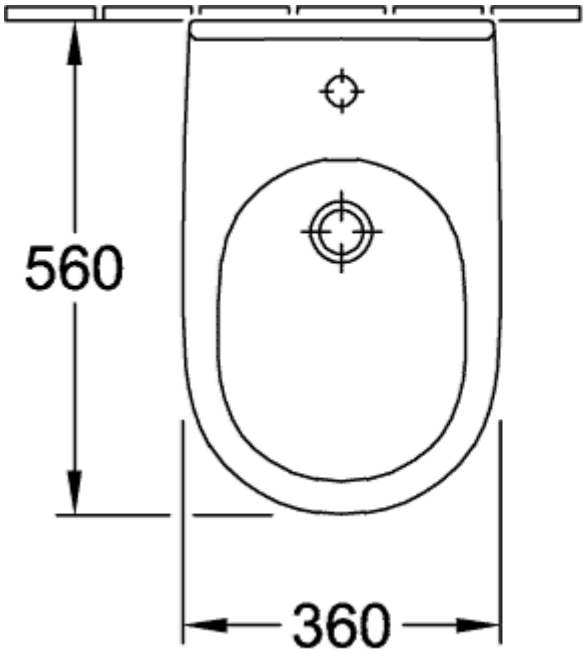

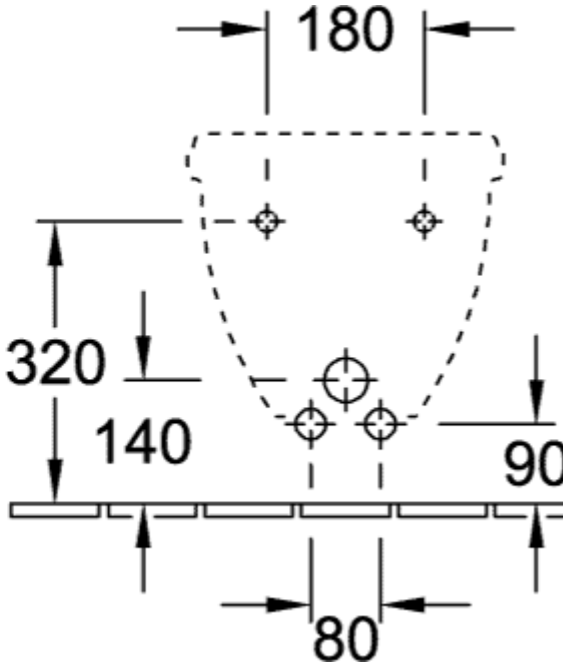
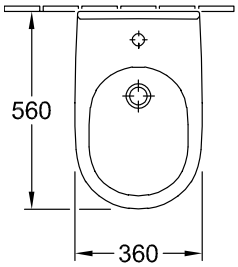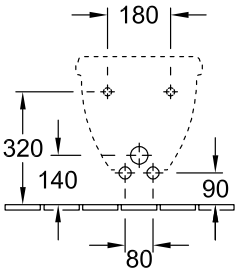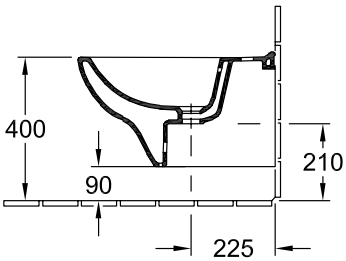
54600001