VICARE WASHBASIN VICARE RECTANGLE

PRODUCT INFORMATION

Article title	Villeroy & Boch ViCare Washbasin ViCare, 650 x 550 x 190 mm, White Alpin AntiBac CeramicPlus, with overflow
Article number	517867T2
Assembly / Assembly type	wall-mounted
Scope of delivery	1 x washbasin
Depth in mm	550
Width in mm	650
Height in mm	190
Interior depth	100
Collection	ViCare
Material	Sanitary ceramics
surface	glossy
Colour name	White Alpin AntiBac CeramicPlus
With overflow	Yes
Shape	Rectangle
Colour designation	White Alpin
Antibacterial surface (with AntiBac)	Yes
Easy surface cleaning (CeramicPlus)	Yes
Number of tap holes punched through	1
Number of bowls	1

TECHNICAL DRAWINGS

517867T2

DE

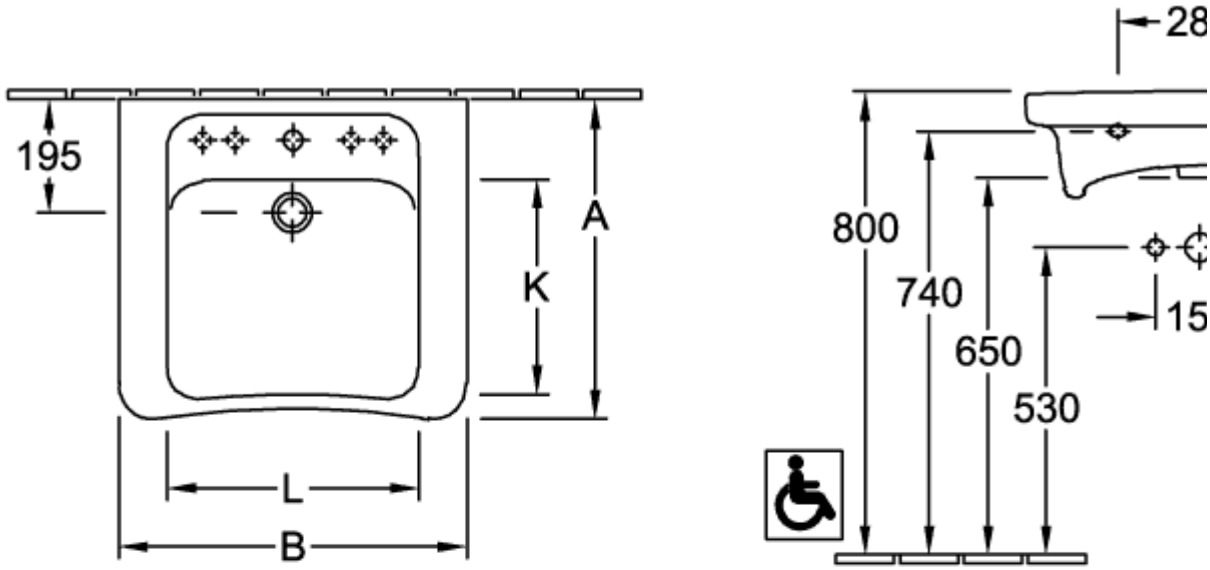

FR+

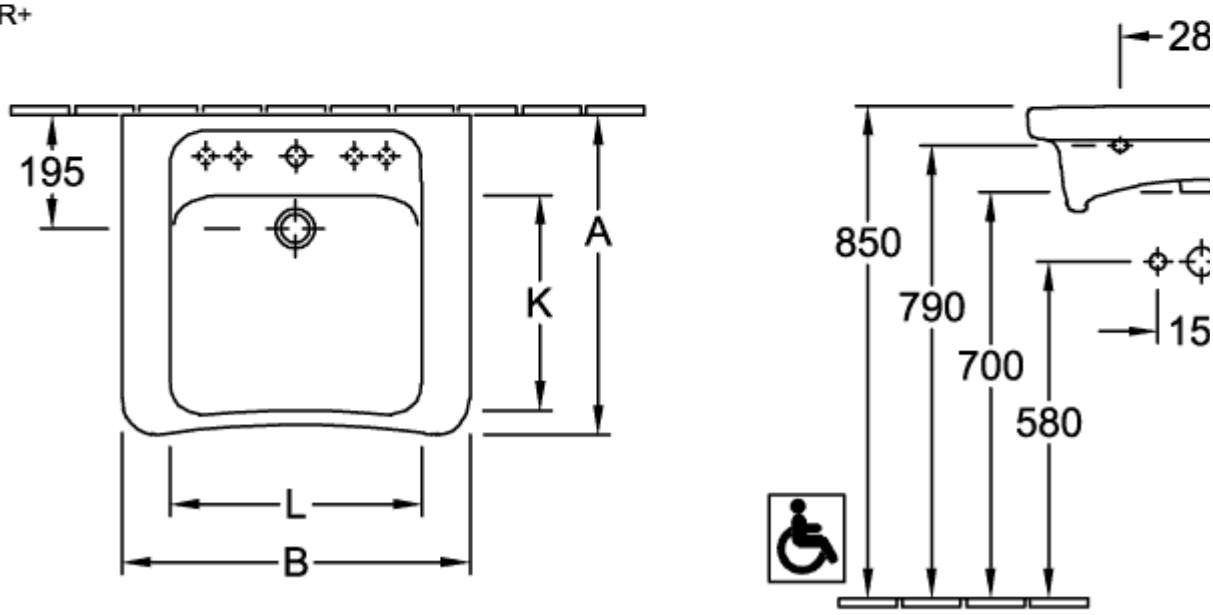

	A	B	K	L
5178 60 / 61 / 62 / 63	555	600	370	435
5178 65 / 66 / 67 / 68	550	650	375	480

517867T2

DE

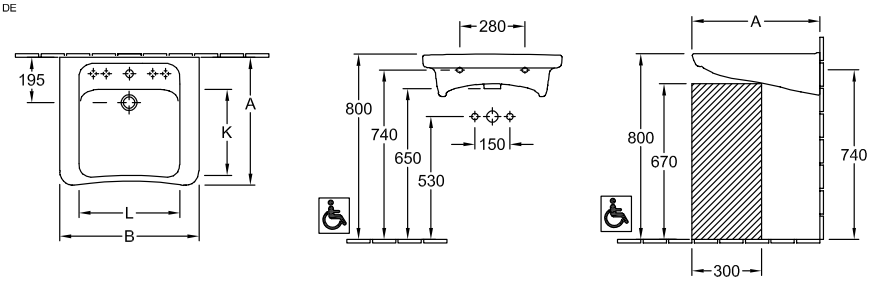

FR+

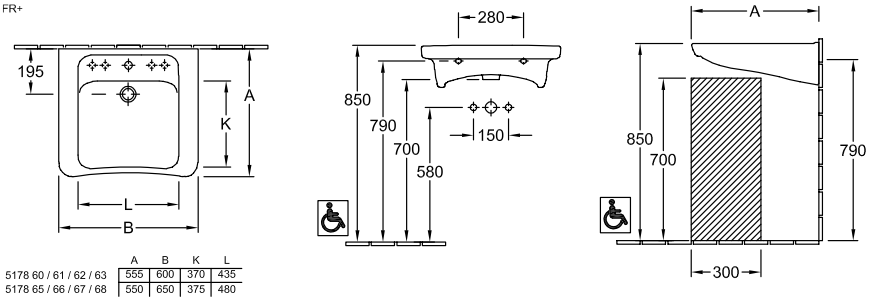

	A	B	K	L
5178 60 / 61 / 62 / 63	555	600	370	435
5178 65 / 66 / 67 / 68	550	650	375	480

517867T2

DE

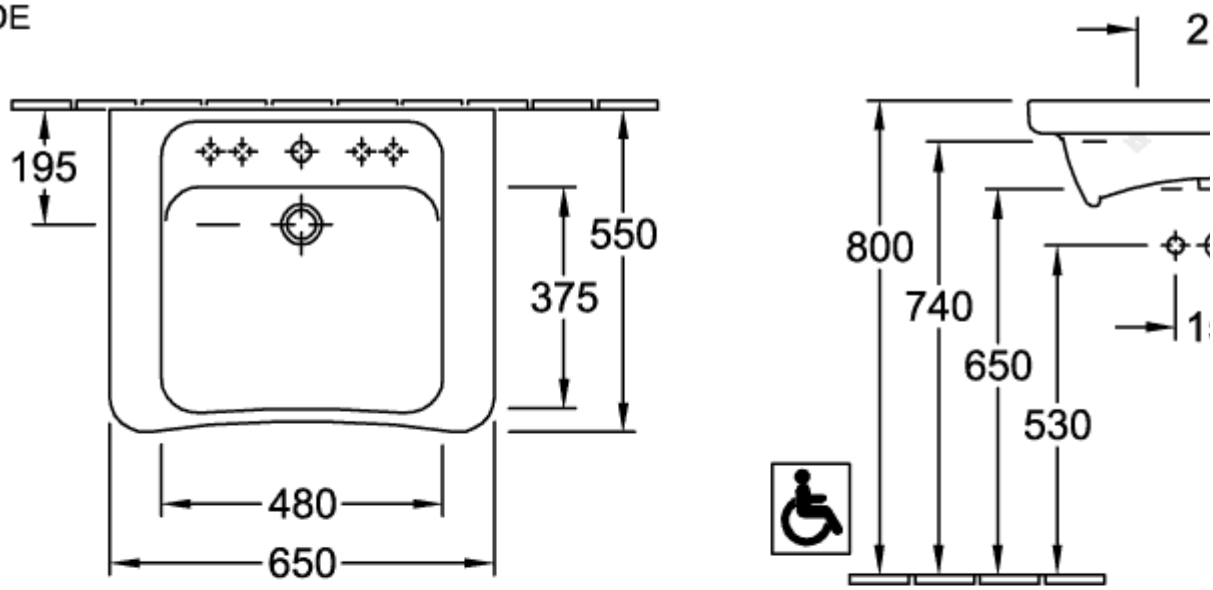

FR+

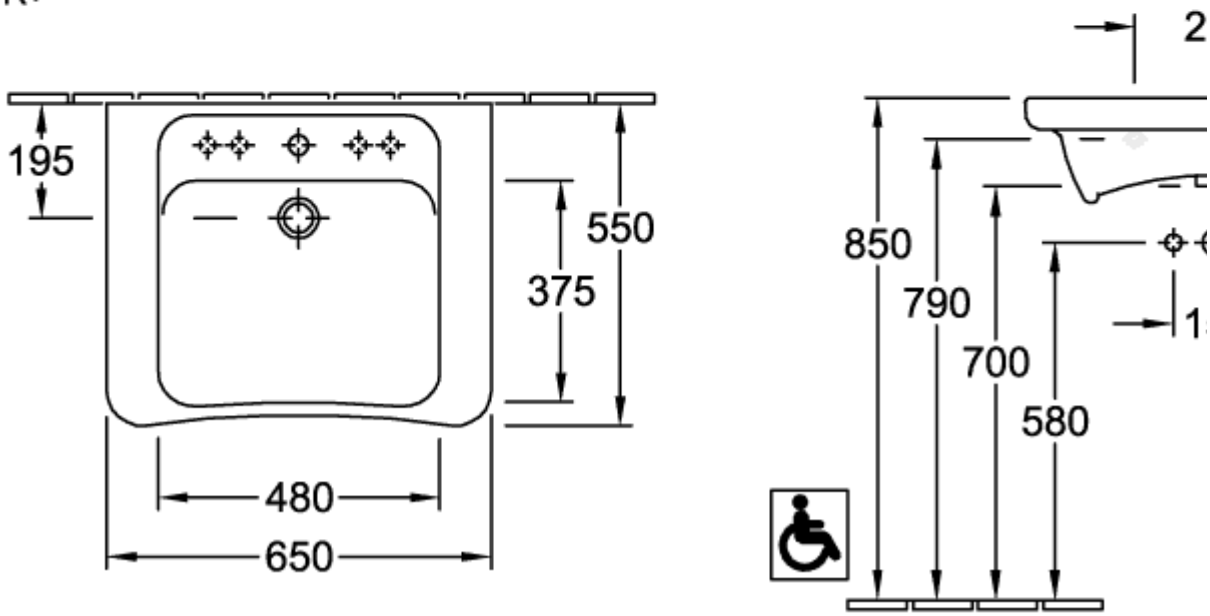

517867T2

DE

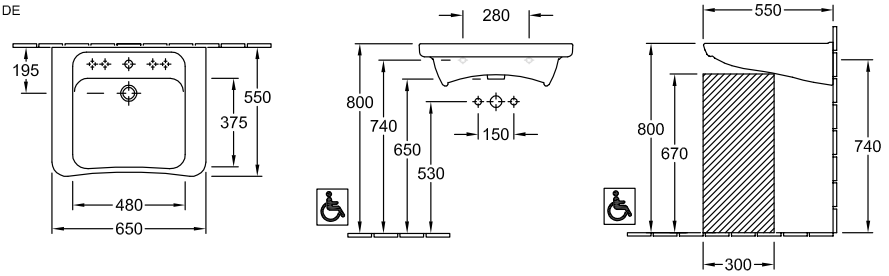
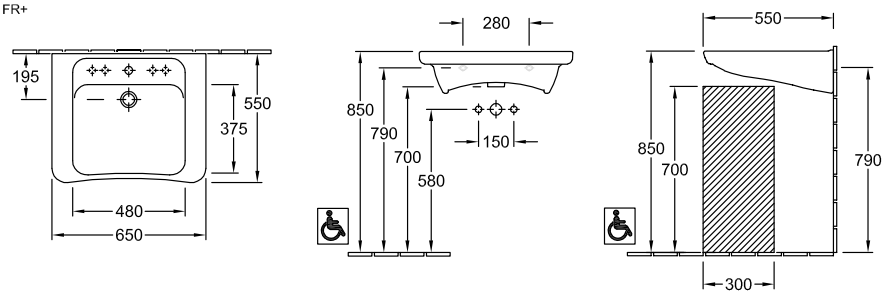
FR+