COLLARO WASHBASIN RECTANGLE

PRODUCT INFORMATION

Article title	Villeroy & Boch Collaro Washbasin, 600 x 470 x 160 mm, White Alpin, with overflow
Article number	4A336001
Assembly / Assembly type	wall-mounted
Scope of delivery	1 x washbasin
Depth in mm	470
Width in mm	600
Height in mm	160
Interior depth	85
Collection	Collaro
Suitable for	3-hole mixer, Matching Villeroy&Boch furniture
Material	TitanCeram
surface	glossy
Colour name	White Alpin
With overflow	Yes
Shape	Rectangle
Colour designation	White Alpin
Antibacterial surface (with AntiBac)	No
Easy surface cleaning (CeramicPlus)	No
Number of tap holes punched through	1
Number of tap holes pre-drilled	2
Number of bowls	1

TECHNICAL DRAWINGS

4A336001

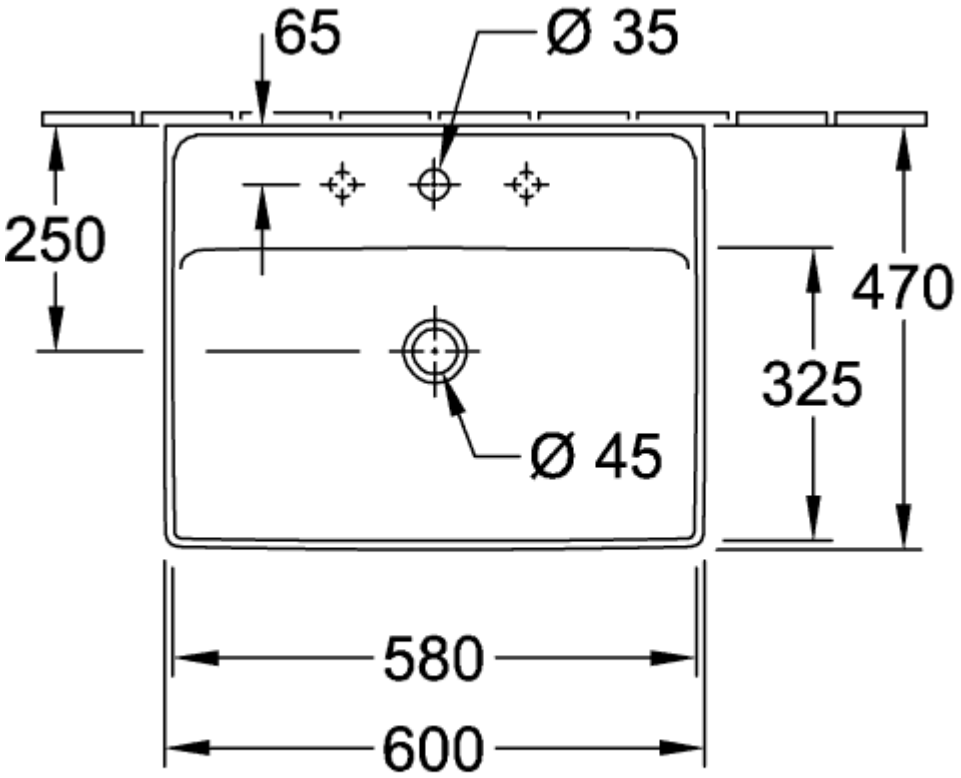
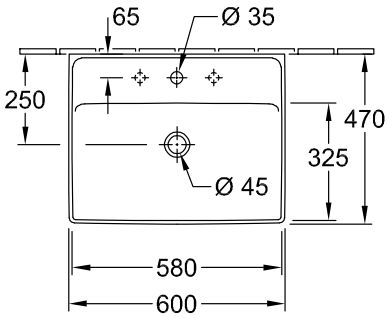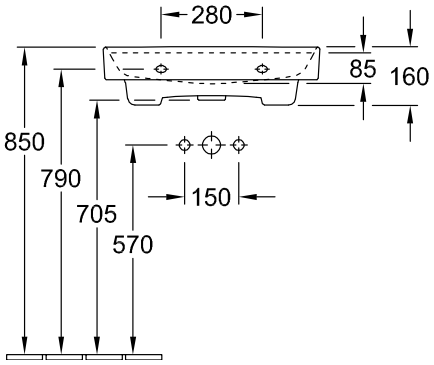
4A336001