VICARE WASHDOWN TOILET VICARE, RIMLESS OVAL

PRODUCT INFORMATION

Article title	Villeroy & Boch ViCare Washdown toilet ViCare, rimless, wall-mounted, White Alpin
Article number	4601R001
Assembly / Assembly type	wall-mounted
Assembly instructions	not suitable for installation with flush valves
Scope of delivery	1 x washdown toilet, rimless , 1 x extended inlet connector, 400 mm
Depth in mm	700
Width in mm	360
Height in mm	344
Collection	ViCare
Suitable for	Concealed cistern
Innovative flushing technology (with TwistFlush)	No
Innovative flushing technology (with TwistFlush[e³])	No
Flush volume l	3 / 6 l
Wall-mounted - floor-standing	wall-mounted
Material	Sanitary ceramics
surface	glossy
Colour name	White Alpin
Shape	Oval
Colour designation	White Alpin
Antibacterial surface (with AntiBac)	No
Easy surface cleaning (CeramicPlus)	No
Rimless (mit DirectFlush)	Yes
Flush type	Washdown toilet
Integrated freshness solution (with ViFresh)	No
Outlet / outlet	horizontal outlet

TECHNICAL DRAWINGS

4601R001

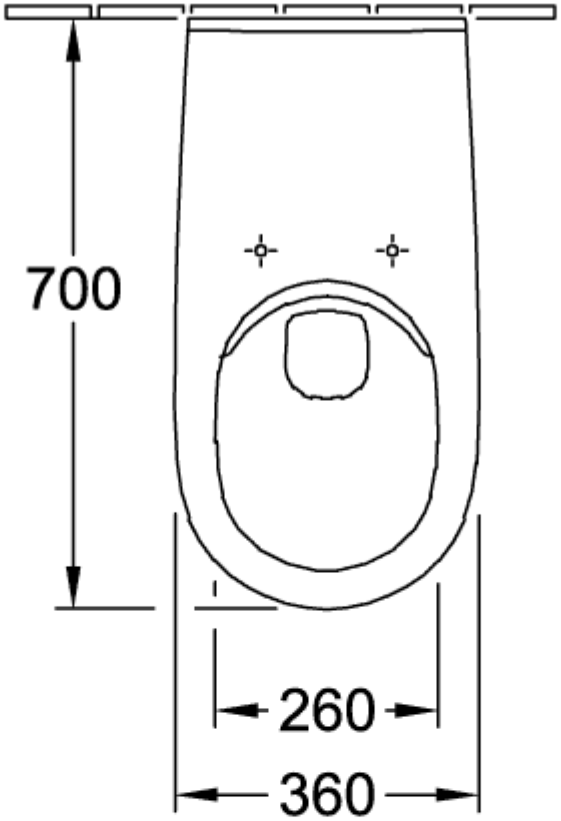

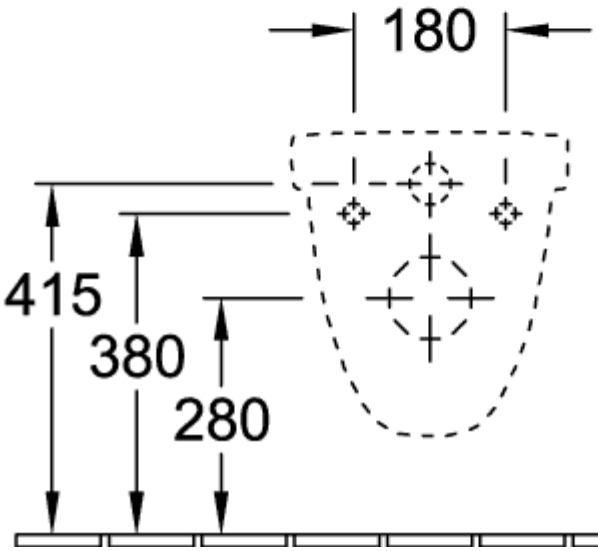

4601R001

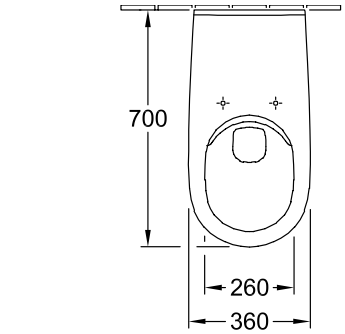

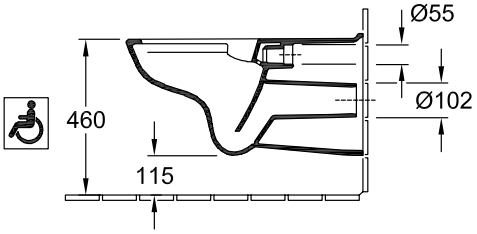

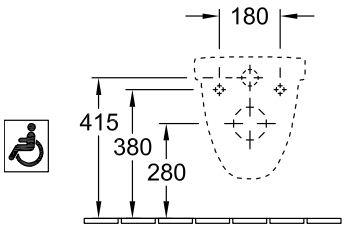

4601R001
FR

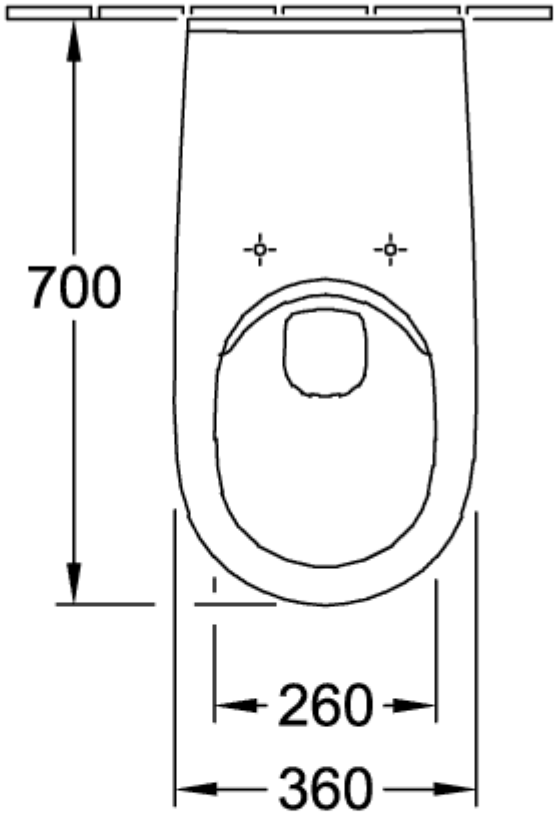

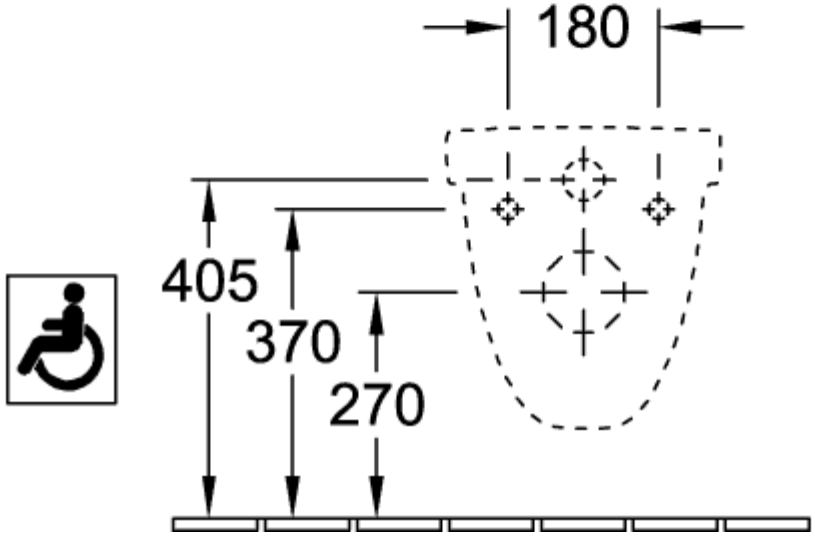
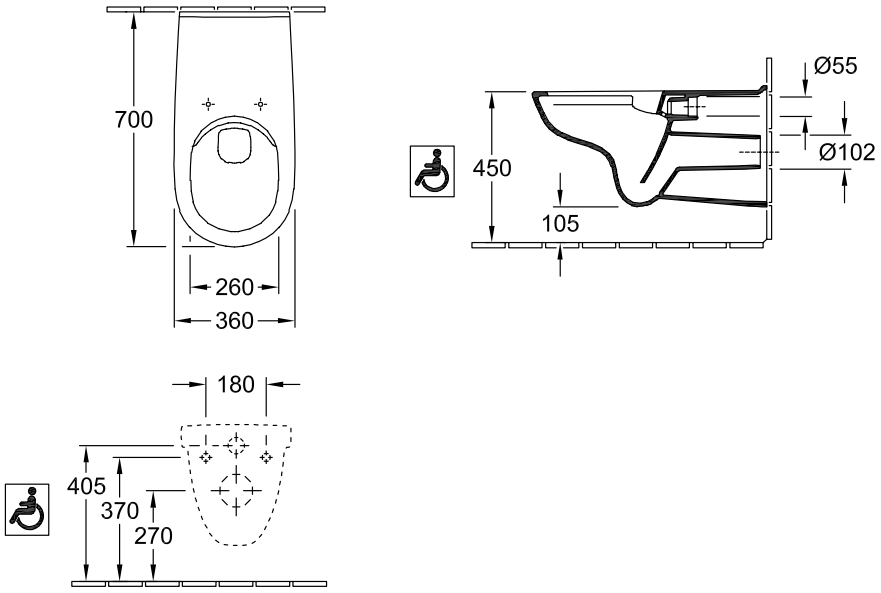
4601R001
FR