FINION VANITY WASHBASIN RECTANGLE

PRODUCT INFORMATION

Article title	Villeroy & Boch Finion Vanity washbasin, 1200 x 500 x 160 mm, White Alpin CeramicPlus, with overflow, unground
Article number	4164C5R1
Assembly / Assembly type	surface-mounted installation
Assembly instructions	supporting the washbasin with a suitable furniture frame
Scope of delivery	1 x vanity washbasin , 1 x closable outlet valve with ceramic valve cover
Depth in mm	500
Width in mm	1200
Height in mm	160
Interior depth	100
Collection	Finion
Tap fitting / Tap hole information	Tap fitting with pop-up waste required
Suitable for	3-hole mixer, Matching Villeroy&Boch furniture
Material	TitanCeram
surface	glossy
Colour name	White Alpin CeramicPlus
With overflow	Yes
Shape	Rectangle
Colour designation	White Alpin
Antibacterial surface (with AntiBac)	No
Easy surface cleaning (CeramicPlus)	Yes
Number of tap holes punched through	1
Number of tap holes pre-drilled	2
Underside of washbasin	unground
Number of bowls	1

TECHNICAL DRAWINGS

4164C5R1

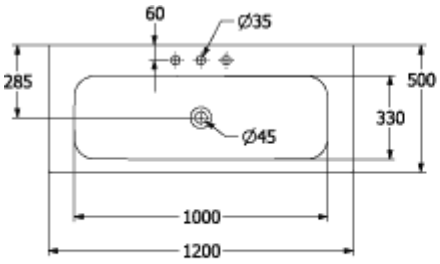

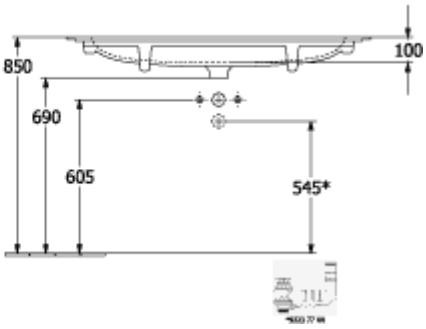
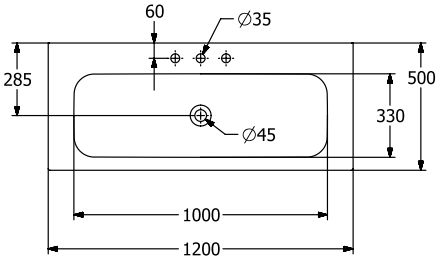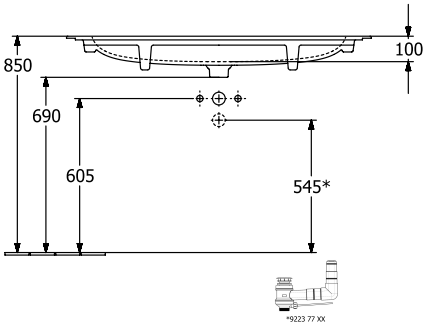
4164C5R1