O.NOVO UNDERCOUNTER WASHBASIN OVAL

PRODUCT INFORMATION

Article title	Villeroy & Boch O.novo Undercounter washbasin, 530 x 320 x 200 mm, White Alpin, with overflow
Article number	41625001
Assembly / Assembly type	Undercounter
Assembly instructions	the hole for the washbasin can only be cut out using the original washbasin because tolerances of several millimetres are possible, installation possible in natural stone and laminate countertops
Scope of delivery	1 x undercounter washbasin , 1 x fastening set
Depth in mm	320
Width in mm	530
Height in mm	200
Interior depth	150
Collection	O.novo
Material	Sanitary ceramics
surface	glossy
Colour name	White Alpin
With overflow	Yes
Shape	Oval
Colour designation	White Alpin
Antibacterial surface (with AntiBac)	No
Easy surface cleaning (CeramicPlus)	No
Number of bowls	1

TECHNICAL DRAWINGS

41625001

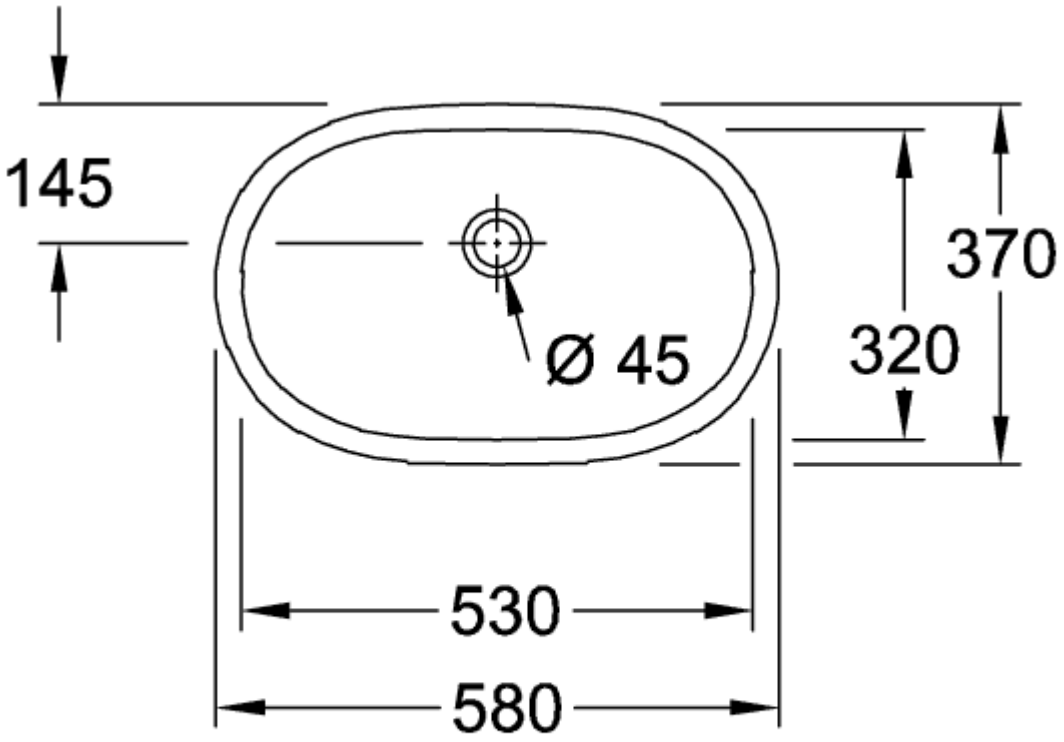

41625001

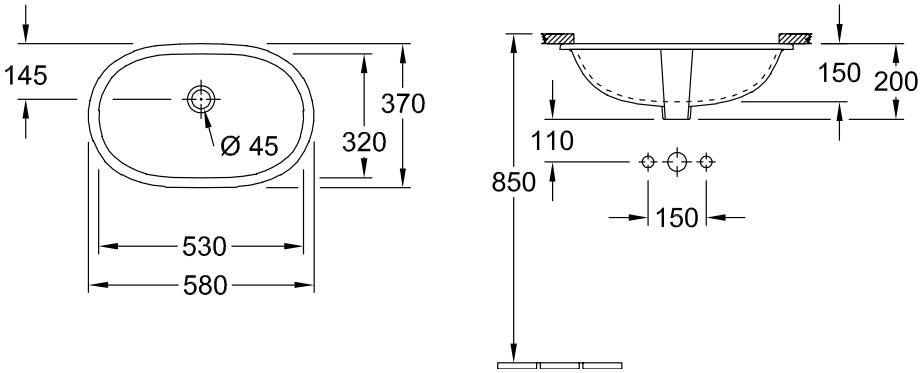

41625001

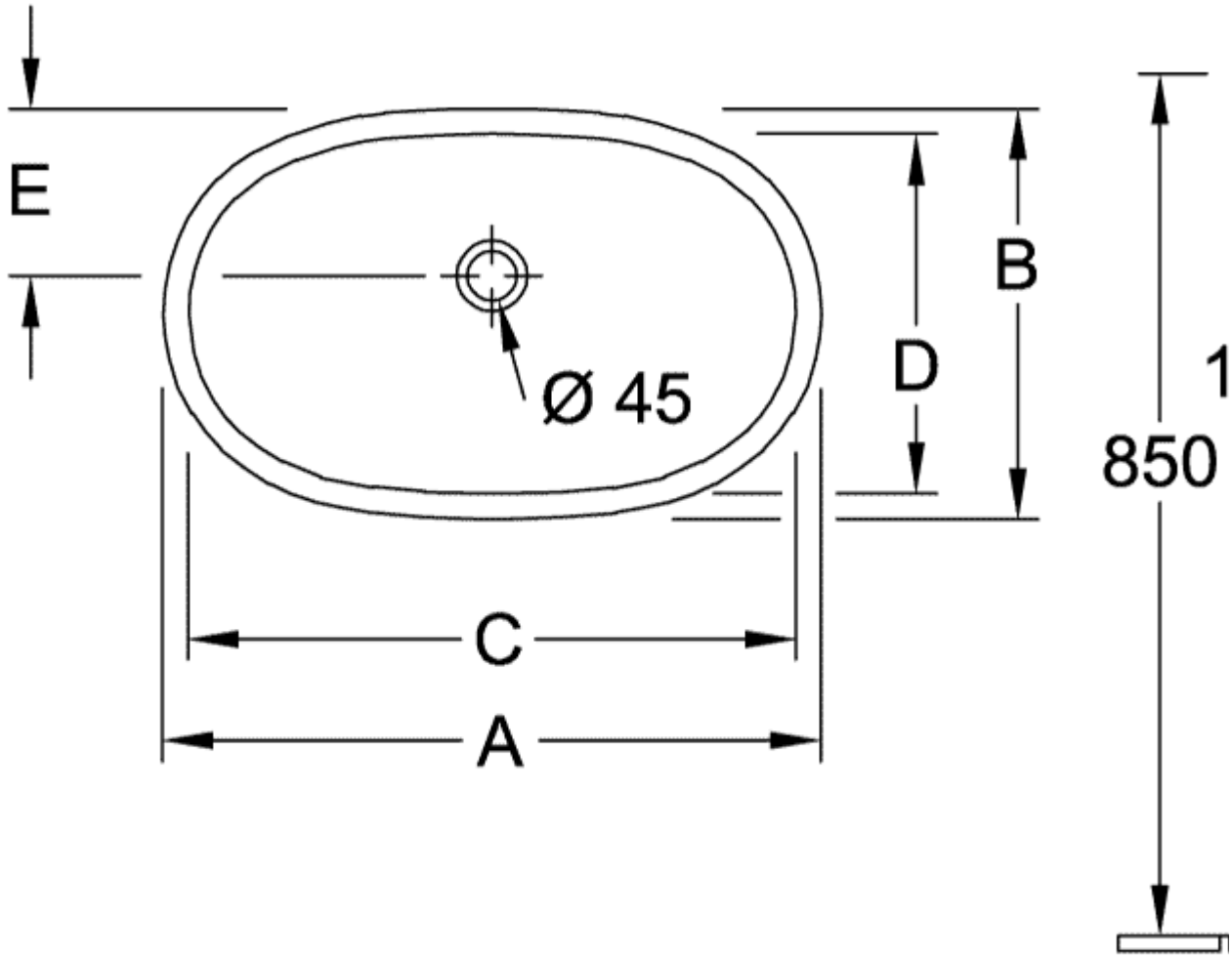

	A	B	C	D	E	M	P
4162 60	650	400	600	350	165	208	160
4162 50	580	370	530	320	145	200	150

41625001

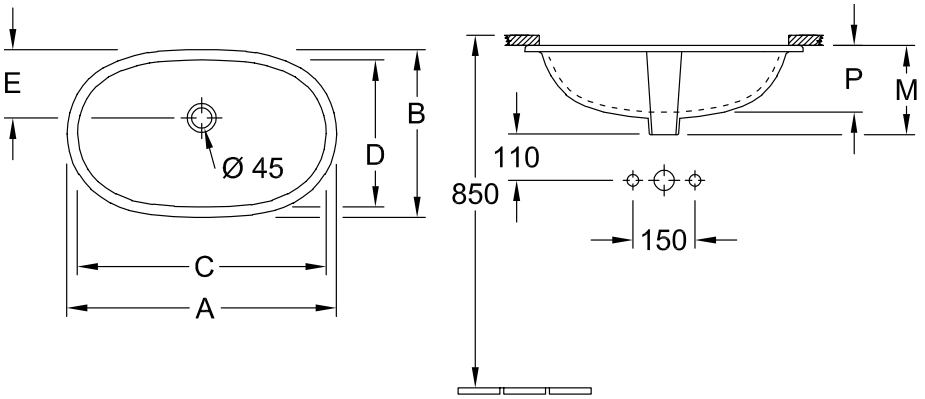

	A	B	C	D	E	M	P
4162 60	650	400	600	350	165	208	160
4162 50	580	370	530	320	145	200	150